IPM Institute of North America

2018 Progress Report

# Contents

## 2018 PROJECT PROGRESS

***Sustainable Food Group (http://sustainablefoodgroup.org/)*** **–** The Sustainable Food Group (SFG) oversees a number of grower and food supply chain projects helping partner organizations reach their sustainability goals.

### Whole Foods Market Responsibly Grown Rating System

We completed our current contract with Whole Foods Market to support the Responsibly Grown rating system for their produce and floral supply chains. Day-to-day leadership of the program transitioned from Matt Rogers to Robin Foster in late 2016. Against our advice, an updated Responsibly Grown Prohibited Pesticide Policy took effect January 1, 2017 for all Responsibly Grown participants, with expanded prohibitions including all organophosphate and N-methyl carbamates, along with several herbicides, post-harvest fungicides and fumigants. The prohibitions eliminated use of two classes of pesticides with thoroughly documented impacts on child/fetal brain development and resulted in greatly reduced participation in the program as suppliers who could not comply dropped out. We worked closely with Whole Foods Market on a proposal to revise the program to restore participation; that proposal was not acted on. In June 2018, Whole Foods Market transitioned leadership of the program from produce purchasing to quality standards and assigned a new day-to-day lead. Our renewal proposal for a fifth scope of work was submitted in April 2018 but not accepted.

Whole Foods Market subsequently chose to retire the Responsibly Grown Program on December 31, 2018 and shift towards integrating their produce sustainability efforts into their Whole Trade program. Whole Trade is a long-time effort that recognizes suppliers participating in specific third-party certification options, which they plan to expand to incorporate others potentially including our collaborators Equitable Food Initiative, SCS Sustainably Grown, Protected Harvest, and our Sustainability Standard partnership with Azzule.

We made additional improvements to the custom Pesticide Risk Tool (PRT) provided to Whole Foods Market suppliers during the Responsibly Grown program. New developments included the ability for international suppliers to use PRT for pesticides not registered with the US EPA, an administrative tool for the Responsibly Grown compliance team to view pesticides suppliers entered into PRT, automatically generated alerts about prohibited pesticide entries and a variety of other enhancements for improved usability. Use of PRT was not mandatory for suppliers in 2018, but an option for additional credit towards a higher rating. We supported the custom PRT interface until its use was discontinued at the close of the program in December 2018.

We began working with Whole Foods in 2010 to develop the program from the ground up, at a time when there were limited options for third-party sustainability certifications beyond organic. Responsibly Grown was an industry-leading, innovative, comprehensive and rigorous supply

chain program that incentivized best practices in IPM, nutrient management, energy and water use efficiency, climate and air quality and worker welfare. One of its cornerstones was the Pesticide Policy which restricted and prohibited key organophosphate pesticides that are driving pesticide-related risks including to workers and consumers throughout produce crop production. The Policy went through several evolutions and resulted in real reductions in risk throughout the produce and fresh flower supply chains that will continue despite the end of Responsibly Grown.

Ultimately it was a great learning experience for IPM Institute and all involved, with a number of crucial take-aways that we can apply to our current and future work:

-Pesticide prohibitions must be carefully implemented only after conversations with suppliers to understand how the pesticides are being used in all crops that will be impacted.

-To be successful a program must effectively balance being meaningful (making real impacts and improvements), achievable (for supply chain partners including farmers to implement) and communicable (simple enough to communicate clearly to suppliers and the public).

-Programs need to deliver value to suppliers including growers. Price incentives, preferential purchasing, technical support, recognition in advertising, awards, signage, etc. are all options.

-A program needs to be able to adapt and evolve in response to feedback and in order to address challenges it is facing. The IT platform must be user friendly and readily adaptable along with the program.

-Communication about the program (with suppliers, stakeholders, the public) needs to be a core part of its implementation and operation.

**iPiPE**

The Integrated Pest Information Platform for Extension and Education (iPiPE) is a national network where participants contribute pest observations to a national map so that any other contributor can see and benefit from the information. The project is in its third year. Both the mobile and desktop app are available and free for download.

Under contract with North Carolina State University, we drafted new IPM Elements for the project, and associated grower surveys as part of an Agriculture Food and Research Initiative grant. IPM Elements are concise summaries of IPM practices for a crop/region developed using extension resources, as well as expert and stakeholder input. By early 2018, IPM Institute had developed 28 new sets of Elements, all of which are available online in an interactive format. This resource enables growers to learn about IPM practices recommended by crop and region, record practices and track progress over time, and for Extension professionals to gauge IPM adoption for a specific crop/region.

At the 2018 iPiPE advisory meeting in Raleigh, we proposed a project to develop a strategic, marketing and business plan to facilitate financial sustainability of iPiPE beyond the current grant. The proposal was accepted and we co-led the effort with Penn State, NC State and the Southern Region IPM Center. We led the initial draft of the plan, subcontracted with a market research firm to conduct interviews with potential users, and will finalize the strategic and marketing plan in 2019, with the business and operating plan to follow the next year.

**Spice Supply Chain**

In 2018, we continued to help an international spice supply chain revamp their supplier sustainability program. We worked collaboratively with them to launch the program, which includes a questionnaire to measure current performance on sustainable farming, worker welfare, business practices and community and social impact. We onboarded 23 suppliers into the program and used their questionnaire responses to inform an update to the questionnaire in late 2018. We will also introduce supplier ratings to better communicate performance on the questionnaire and to help drive improvement over time.

We helped the supplier formalize and streamline the project process, from proposal to final reporting. The new process will help the supplier measure and communicate project impacts to suppliers, customers, members, and potential funders. The IPM Institute continues to work with one of the spice company's black pepper suppliers in Vietnam, to implement this project to expand organic pepper production and to use IPM practices to produce cleaner conventional peppers.

**National Restaurant Chain**

We began working with a national restaurant chain to reduce risks and improve sustainability metrics that can be communicated to guests, employees, shareholders and the public. We created and distributed a survey to program produce suppliers and followed up with phone calls to better understand responses. The company announced a ban on chlorpyrifos in its fresh produce supply chain in late 2018. We helped develop resources about chlorpyrifos alternatives for crops and origins where implementation may be challenging. We continue to review pesticide application records from suppliers whose product-origin combinations are at higher risk for chlorpyrifos use. We also connected the company with several industry sustainability collaborations, including Field to Market, the Sustainability Consortium and the Stewardship Index for Specialty Crops (SISC). The restaurant chain is working with SISC to implement sustainability projects with a number of its suppliers, including leafy greens and tomato growers in California and Arizona.

**Development of the Sustainable Food Group Sustainability Standard**

In response to the success of the Sysco Sustainable/ IPM Program, Sustainable Food Group collaborated with Azzule Systems™ and PrimusLabs™ to develop a third-party certification known as the Sustainable Food Group Sustainability Standard™. This standard has international applicability and will address key sustainability criteria including soil health, pest management and agrochemicals, waste and recycling, water, energy, processing, employee relations and

conservation. Once accredited, the standard will be open to a variety of potential users including food companies and producers interested in sustainable crop production. The standard will also serve as an audit addendum to current food safety audits.

The Sustainability Standard is being piloted in 2019 with a small group of auditors and growers. The Sustainable Food Group will maintain the standard, develop audit and support documents, train auditors and manage approved certification bodies.

***Sysco Sustainable Agriculture/IPM Program* -** The IPM Institute continues to support Sysco's fruit and vegetable producers in adopting IPM and other sustainable practices. The IPM Institute evaluates Sysco suppliers' written Sustainable Agriculture/IPM Programs on an ongoing basis and provides recommendations for improvement. We reviewed and updated the environmental indicator report (EIR) for the 2017 crop year and assisted Sysco in compiling the 2017 results. The 2017 EIR revealed that Sysco's Sustainable Ag/IPM Initiative now includes 1,053,736 acres, with results from 77 suppliers and 181 processing facilities of agricultural products worldwide. We continue to engage with Sysco on programmatic updates and the expansion of the program to fresh crops.

***Organic and IPM Working Group (organicipmwg.wordpress.com)* -** The Organic and IPM Working Group's continued goal is to align the efforts of the organic and IPM communities by building partnerships, fostering dialogue among diverse stakeholders, exchanging information, and working toward shared priorities. The group was funded by the North Central IPM Center in 2018 and was fully funded $13,446 for 2019 to continue efforts.

The working group held an in-person meeting in March 2018 in conjunction with the International IPM Symposium in Baltimore, Maryland. Fourteen attendees were present, including five non-members. The group discussed progress and future direction, including a decision to focus on education and outreach through quarterly presentations.

In 2018, the group drafted an article for the Elsevier journal *Biological Control* on the connections between IPM and organic farming, which was submitted in early 2019. The working group will also publish a fact sheet on regenerative, resilient agriculture in conjunction with the IPM Centers.

***Partnership for Ag Resource Management (www.partnershipfarm.org, https://www.farmland.org/blog/learning-circles-help-women-landowners-achieve-their-conservation-goals)* –** This project improves water quality, soil health and cropland productivity in partnership with ag retailers. By reaching out to farmers directly through trusted ag retailers, we help increase sales of beneficial products and services that reduce nutrient-losses from cropland. Our work throughout the Great Lakes Basin (GLB) has built upon our successful ag retailer pilot in the Western Lake Erie Basin (WLEB) that began in 2010. In 2018 our work expanded to include ag retailers in the Upper Mississippi River Basin (UMRB).

In June 2018 we conducted an extensive literature review to integrate nitrogen (N)-loss reduction estimates into our Nutrient Loss Reduction Calculator. The Calculator now includes estimates from 56 peer-reviewed articles reporting on phosphorus (P) and N-loss reductions from cover crops, soil sampling, variable rate fertilizer technology (VRT) and other best management practices.

Our efforts have contributed to ongoing reductions in annual dissolved reactive phosphorus (DRP), total phosphorus (TP) and total nitrogen (TN) losses in the GLB and UMRB. In 2018, participating retailers reduced TP losses from cropland by an estimated 6.4 million pounds and TN losses by an estimated 59 million pounds. We regularly develop and distribute tools and resources, facilitate webinars, coordinate cost-share programs and circulate communication products. In 2018, we added 1,154 individual contacts to our overall list, amounting to 6,778 total. Our tools and resources were distributed to our list, including 3,211 ag retailer employees along with agribusiness and other trade personnel, watershed organizations, state agencies and more. We distribute quarterly newsletters to 5,469 recipients.

Our 2018 annual ag retail survey revealed that since 2010, ag retailers in the Sandusky River Watershed, Ohio, have increased sales of cover crops from two to 24% of serviced acres and increased variable rate fertilizer application (VRT) from 17 to 52%. The majority of participating ag retailers reported earning profits or breaking even in each of our promoted products and services. The 2018 season survey represents our seventh year of tracking in the Sandusky River Watershed, our fourth year in the GLB and our first year in the UMRB.

We expanded our media presence in 2018 by distributing press releases to additional news publications including Ohio AgriBusiness Association, *Crop Life*, *Precision Ag* and *Ag Wired*. Coverage from these sources improves our visibility and increases public and trade awareness of the joint efforts made by the McKnight Foundation, Great Lakes Protection Fund, Clean Lakes Alliance and ag retailer institutions to improve water quality.

We conducted seven webinars in 2018, with invites sent to 6,200 contacts stemming from multiple sectors across the US. Our webinar series provides a forum for retailers and other ag professionals to learn the latest nutrient management research for beneficial products and services, in addition to marketing and management tips to ensure success on their growers' fields. Each webinar features experts from university or Extension sharing the latest research on reducing P and N-losses. In total, there were 2,806 occurrences of engaging viewers with unique content through our webinar series. The seven webinars grossed:

- 2,748 total registrants on GoToWebinar
- 1,251 total live attendees

- 2,031 individuals earning certified crop advisor (CCA) continuing education units (CEU's) for viewing
- 1,297 individuals watching the recording on-demand

The series received positive feedback via evaluations and participant emails. For the seven webinars, viewers rated the overall value of the webinars, on average, as 4.2 on a scale of 5. Participant evaluations also indicated that ag retailers plan to use the information to train other ag retail staff on the latest research and to increase sales of beneficial products and services.

We are in the third and final year of a U.S. EPA Great Lakes Restoration Initiative grant to expand our VRT cost-share program into four watersheds within the WLEB, targeting growers that have never tried VRT. Currently, there are 26 ag retailers participating that have actively implemented VRT on 20,069 acres between their 253 growers. In a survey conducted with 40% of our participating ag retailers, 100% were satisfied with the ease of the program and indicated that they would participate in another cost-share opportunity. Additionally, 33% of participating ag retailers reported they expect more than 75% of their growers to continue VRT without cost-share assistance. An additional 40% of ag retailers reported they expect more than 50% of their growers to continue with VRT on their own as well.

We are working with Clean Lakes Alliance to expand our project to ag retailers located within the Yahara River Watershed, Wisconsin. We partnered with the University of Wisconsin-Extension to conduct a local ag retailer survey to obtain baseline data on products and services offered. The survey incorporated unique questions focused on prevalent issues for Yahara and Wisconsin retailers. Thirteen ag retailers representing 183,500 serviced acres participated. We provided participants with an individual report, comparing their reported practices with other ag retailers in the watershed and state, along with an aggregate report. We are also working to create an *Agronomist Handbook* specific to the Yahara River Watershed, featuring updated factsheets relevant to water quality issues faced within the Watershed.

In 2018, we secured funding from the McKnight Foundation to offer a cover crop incentive program through ag retailers to their customers located within the Blue Earth River Watershed (MN and IA) and the Yahara River Watershed, expanding our reach to the UMRB. The incentive program will offer first-time cover crop users and users looking to expand acres to fields without cover crop history, a discount on cover crop seed. Enrollment in the program will begin in spring 2019.

In 2018, our project partnered with the SPARC Initiative, Sustainability Programming for Ag Retailers and CCAs, to contribute our expertise to one of several online training modules for ag retail and CCA professionals, focused on the packaging of ag retailer services to include sustainability insights and to engage customers around those. The modules are published on the

American Society of Agronomy online classroom under SPARC and offer free CCA continuing education units and completion certificates for professionals. The SPARC Initiative is a partnership between Field to Market, American Society of Agronomy, Ag Retailers Association and the Environmental Defense Fund.

We are also working with American Farmland Trust (AFT), Cornell Cooperative Extension, Wood County SWCD and Utah State University in an effort called the Great Lakes Conservation Connect, funded by the Great Lakes Protection Fund, to engage women non-operator landowners (WNOLs) in Ohio and New York and their farmer tenants to increase conservation practices on rented lands. More than 50% of the land in the GLB is not farmed by landowners, and a good portion of those landowners are women. Our team has surveyed ag retailer's attitudes, aided in the creation of a toolbox of resources and assisted in the planning and implementation of several lessee outreach events. We have designed a brochure that ag retailers can share with growers and landowners to help start conversations about practices that improve soil health and nutrient retention on leased land. We developed and circulated a newsletter in October 2018 and in March 2019 discussing the benefits of practices and lease types that help integrate those practices on rented operations. The newsletter also advertises incentives and resources the partnership has developed including conservation checklists, farmer workshops and landowner learning circles, an online resource center and practice cost-shares. We also have created a three-part webinar series taking place in early 2019 to increase awareness of the need for landowners and farmer tenants to work together to care for rented lands.

Finally, in collaboration with Penn State and North Carolina State University, we completed an ag retailer-centered objective of the iPiPE project. We evaluated the feasibility of iPiPE's use by ag retailers to assist in crop scouting and reporting efforts. However, we found retailers felt iPiPE too thought and time-consuming to be an effective program for their location, along with the fact that several retail-centered software programs were far superior for scouting and reporting versus an app created based on Extension purposes. Our final report to USDA detailed improvements that could be made to iPiPE to make it more attractive to retailers.

***Pesticide Risk Tool*** **(*pesticiderisk.org*) -** The Pesticide Risk Tool (PRT, previously ipmprime.com) is a web-based tool used to analyze pesticide risk to human and environmental health at the farm level. The tool is hosted online in the cloud and uses the best available science in a user-friendly interface.

In 2018, the PRT team continued work on developing a fully responsive mobile site, improving usability and addressing bugs. We worked with the California Cut Flower Commission to add functionality to PRT for California-based growers to upload spray records in the same format they use with the California Department of Pesticide Regulation.

SCS Global Services began incorporating PRT in their Sustainably Grown standard in 2017 and continues to rely on the Pesticide Risk Tool in the pesticide exemption review process for the program. In 2018, IPM Institute provided expert review for all SCS Global Services Sustainably Grown-certified client's prohibited use pesticide requests, as well as additional crop-specific program support.

Since 2015, PRT has been used to analyze pesticide records for EcoApple and Potato Sustainability Initiative participants. 80 sets of EcoApple pesticide records and over 8,000 potato fields were run through the PRT bulk-uploader this year. In 2018, IPM Institute contracted with Protected Harvest to integrate PRT into the Lodi Rules certification program, with details expected to be finalized in 2019. The PRT team also began a project with Oregon State University, funded through a USAID grant, to expand the PRT database to include pesticide active ingredients used on fall armyworm in Africa.

***Green Shield Certified (GSC) (http://www.greenshieldcertified.org/)*** - In 2018, Green Shield Certified completed 17 recertification onsite evaluations for existing participants and certified the first international participant, a facilities management company in Dubai. Two new companies, as well as four Goldman Sachs facilities in New York, are currently pursuing certification and are projected to complete the process in 2019. 30 companies, one housing program and three facilities are currently certified by Green Shield Certified.

Green Shield Certified launched a new monthly e-newsletter, Green Shield Pest Control Corner in January 2019. The newsletter is sent to certified participants and includes news on pest control research and technology, industry updates and green pest management tips. It is also used as a platform for participants to share news from their own companies or IPM programs.

A new online, self-guided IPM training for facility managers is currently under development. The training contains information on the core principles of IPM, how to establish a facility IPM program and identification of common facility pests. The online training platform will be based on *The Pest Defense for Healthy Schools* e-learning modules. The IPM for Facility Managers training is projected to launch in 2019 and will be offered to Green Shield Certified participants at a discounted rate.

***IPM STAR for Schools and Childcare Centers (https://ipminstitute.org/projects/ipm-star/)*** - In 2018, IPM STAR certified one new school district in Wylie, Texas, in cooperation with Janet Hurley at Texas A&M AgriLife Extension Service. IPM STAR continues to work with a school district in Modesto, California following an onsite evaluation report that was completed in 2017. The district outlined a detailed plan to complete their outstanding requirements and they are on track to achieve certification by fall 2019. IPM STAR is also working to schedule an onsite evaluation with a school district in Whitehouse, Texas, contingent on funding opportunities.

***North Central School IPM Working Group*: *Increasing Adoption of IPM in Schools (www.ipminstitute.org/NC_IPMIS_Working_Group/main.htm, ipminstitute.org/projects/school-ipm-2020/ ) -***
In 2018, the North Central School IPM Working Group continued holding bi-monthly north central and monthly national school IPM conference calls to facilitate collaboration amongst school IPM stakeholders. The North Central school IPM working group added three new members in 2018 and the National Steering Committee added one new member. External guest speakers from Wisconsin Green and Healthy Schools, Xcluder Rodent and Pest Defense and Bayer were featured to talk about advancements in school IPM and pest management.

Our organization led a rebranding outreach initiative for Stop School Pests, which included marketing surveys to over 90 school staff, to develop a concise school IPM message that captures its many benefits to student health. The purpose of the rebrand was to increase participation after several training events were cancelled due to low registration and other events experienced very low attendance. The result was a launch of the new brand, The Pest Defense for Healthy Schools (formerly Stop School Pests). The Pest Defense website retains all the functionality of Stop School Pests, including individualized training for facility managers, maintenance staff, landscape staff, food service professionals, custodians, administrators, teachers and school nurses. Any of these staff roles can take the free, online, self-guided training, complete a short quiz and earn a proficiency certificate affirming their commitment to school IPM. The rebrand developed the new mission statement "Creating healthy, safe spaces for students and staff" which is used on all promotional materials including an easy-to-digest infographic on the health, environmental and economic benefits of school IPM.

As a result of this rebrand, over 1,000 school staff were educated by our working group at in-person training workshops in 2018. Our online presence also grew, and the total number of Pest Defense website sessions increased from 825 to 2,927 while the total number of users increased from 613 to 2,235. This website traffic translates directly to IPM participation, and all surveyed users have reported satisfaction with the relevance and delivery of the content. Our site has 286 registered users and has issued 191 IPM certificates. 100% of users who completed a course online and left feedback indicated that the training content met their expectations and needs. School staff who attended live presentations of The Pest Defense training gave the course materials a 4.96/5 in usefulness, a 4.93/5 in ability to provide a safer learning environment and a 4.91/5 in ability to manage pests safely in all environments. Ability to understand course learning objectives (4.94/5) and ability to improve work duties (4.90/5) were also evaluated.

The North Central working group reached out to school and environmental health organizations to spread awareness of The Pest Defense for Healthy Schools program. We formed partnerships with 14 of these organizations, including Green Ribbons Schools, Green Schools National Network, Harvard Schools for Health, the Healthy Homes Partnership, Improving Kids Environment, the Midwest Pesticide Action Center, the National Association of School Nurses,

the National Education Association, San Francisco Department of the Environment, StopPests, Wisconsin Association of School Business Officials, Wisconsin Green and Healthy Schools and Women for a Healthy Environment. This outreach resulted in a multitude of blog posts, newsletter articles and features on school and environmental health resource pages.

New partnerships and resources were shared via the Pest Defense News Round-Up monthly e-newsletter. This newsletter highlights applicable articles and success stories for IPM practitioners and is sent out to nearly 4,500 subscribers.

The IPM Institute grew its partnership with the National Education Association (NEA). In-person IPM workshops were held for educational support staff in Nevada, Pennsylvania and New Mexico. Finally, we developed an Illinois specific school IPM training module for The Pest Defense for Healthy Schools in compliance with the Illinois Department of Public Health Structural Pest Control Act.

***Eco Apple (redtomato.org/eco-apple)*** **-** Red Tomato began the Eco Apple Project in 2005 as a certification program to recognize New England orchards that were successfully implementing advanced IPM programs. Certified growers use Eco Apple and Eco Stone Fruit trademarks to differentiate their crop in the marketplace and increase access to new markets. In 2018, 16 growers with 1,583 acres of apples and 211 acres of stone fruits were certified and one new apple orchard joined the program. We continue our partnership with Red Tomato on this project, providing scientific and technical expertise on IPM practices and strategic planning to help Red Tomato increase traction in the marketplace for their Eco brands.

We used the Pesticide Risk Tool (pesticiderisk.org) to complete a risk analysis of 2009 - 2018 pesticide application records for the five original Eco Apple growers. Project objectives were to identify drivers of pesticide risk, changes in pesticide risk between pre and post-certification and IPM successes. Outcomes showed that total high-risk scores have dropped 47% between pre and post-certification years among the six growers. Additionally, high-risk scores during post-certification years have been eliminated from several risk indices, including: Avian Acute, Aquatic Algae, Human Dietary and Consumer Cancer. Additionally, risk within the Dermal Cancer index has dropped by 20% in post-certification years. Our analysis showed that high-risk within the Earthworm index dropped significantly within the first year of certification, but slowly increased in years two, three and four of certification. Opportunities to reduce risk need to be accomplished through improved pesticide selection and identifying non-chemical strategies for managing diseases.

***Midwest Specialty Crop Grower Services (ipminstitute.org/projects/specialty-crop-grower-services)*** **-** IPM Institute continues to offer technical and other IPM assistance to apple and small-fruit growers throughout southern Wisconsin, southeastern Minnesota and northern Illinois

through our pest-scouting program, NRCS Technical Service Provider services, AppleTalk conference calls and IPM certification.

**IPM Technical Assistance**

The Apple IPM scouting and consulting program completed its tenth season in 2018 with 22 growers and 876 acres of apples enrolled in our season-long program. Two pest scouts based in Madison and La Crosse, Wisconsin, service the region. The program continues to provide routine scouting, IPM technical assistance and sprayer calibration. Services offered for other specialty crops existing clients with small acreage of blueberry, grape, raspberry and strawberry. Acreage of these fruit crops are small across the region and primarily produced as a U-Pick and direct-market crop, therefore there has been a lack of interest in more advanced technical assistance.

**IPM Pathways Survey**

This year we collaborated with the Wisconsin Department of Agricultural Trade and Consumer Protection Agency's Bureau of Plant Industry/Division of Agricultural Resource Management on a proposal to the USDA-APHIS to conduct invasive insect and disease monitoring across Wisconsin in community gardens, agronomic crops, community support agriculture (CSA) producers and specialty crop producers. Total funding for the project was $95,000 and the IPM Institute was contracted for $29,000 to complete the pest survey and monitoring at 18 orchards and 12 vineyards across Wisconsin.

The survey focuses on early detection of invasive pests through visual scouting, pheromone trapping and collection of plant samples taken in for disease diagnostics. Insect pests included in the survey include European grape berry moth, European grape vine moth, light brown apple moth, brown marmorated stink bug and spotted lantern fly. Diseases monitored included Australian grape vine yellows, bois noir/stoblur, flavescence doree disease and Pierce's disease. This work is being funded for a second year in 2019 for a total of $96,000 with $34,079 of the funding being awarded to the IPM Institute to carryout pest survey activities in orchards and vineyards.

**TruEarth Certified**

Our market-based IPM certification program, TruEarth Certified, first launched in 2010 and certified ten growers and 675 acres in 2018. The TruEarth protocol was based on significant input from participating growers and our experience with the Red Tomato Eco Apple program. TruEarth Certified growers sell their fruit wholesale through Wescott Agri Products' Honeybear Brands, which operates under the Mississippi River Valley Fruit Company label. The TruEarth Certified program is part of a larger effort by Wescott Agri Products to differentiate the regional crop and access new markets, including Aldi, Meyer, Wal-Mart and Whole Foods Market. An annual pollinator survey has been completed at participating orchards between 2014 and 2018 to develop a baseline for assessing pollinator health and position the program as a pollinator-friendly enterprise. After four years of completing assessments, we worked with a researcher at the University of Wisconsin to finalize a report on our observations. This work demonstrated

that healthy and abundant pollinators are present in our orchards and the frequency of bee visits was consistent with data from other studies on pollination in orchards. Our work also revealed that approximately 25% of all pollinator visits from our TruEarth orchards are completed by native pollinators.

**AppleTalk**

AppleTalk, a collaboration between Threshold IPM Services, UW CIAS, Wisconsin Apple Growers Association and the IPM Institute celebrated its 12th season in 2018. Originally part of the Wisconsin Eco-Apple Project and funded by the US EPA, AppleTalk has been managed as a fee-for-service program by the IPM Institute since 2013. Participation in 2018 grew to 62 registered users. The program features a weekly discussion on orchard IPM from early spring to harvest with consultant John Aue of Threshold IPM Services. The program includes regular guest presenters from Cornell University, Michigan State University and University of Wisconsin. Growers have the option of participating on live calls, downloading recorded calls or accessing call summaries on the AppleTalk blog, ecofruit.wisc.edu/appletalk.

***Oneida White Corn Improvement Project* -** The Oneida White Corn Improvement Project was originally a two-year collaboration between the Oneida Nation of Wisconsin, North Central IPM Center and the IPM Institute, to improve the sustainability of crop production at Tsyunhehkw^ Organic Farm, located in Oneida, Wisconsin. It was extended into 2017 and 2018 to work with another community group who began their own white corn project. The primary objective was to identify crop-management practices that could improve yield, quality and profitability of organic Oneida white corn. Oneida white corn is an indigenous variety and production requirements differ from conventional corn.

Farm managers at Tsyunhehkw^ received on-farm support from Tilth Agronomy and the IPM Institute during the 2014, 2015 and 2016 growing seasons. The project concluded with a detailed report outlining observations and best practices for the growing season and harvest to improve yield and profitability. Future improvements for white corn production at Tsyunhehkw^ include strengthening the relationship with other tribal farming operations to access equipment to reduce labor costs and improve farm productivity. This would allow Tsyunhehkw^ to achieve production efficiencies without purchasing additional equipment.

This project was supported with funding from the North Central IPM Center and will conclude this year with publication of a production guide.

***Potato Sustainability Initiative (http://potatosustainabilityinitiative.org)* -** This project began as an IPM practice-based survey for three of McDonald's major potato processors. The effort expanded to include six processors and is now referred to as the Potato Sustainability Initiative (PSI). IPM Institute collaborates on project development and coordination with the six processors, National Potato Council (NPC), Canadian Horticultural Council (CHC) and multiple

potato grower representatives. In 2018, more than 500 growers participated in PSI, including a fresh potato packer joining the processor group for the 2019 growing season.

In 2015, the team developed outcome-based metrics to accompany the annual practice-based processor survey. These metrics assess grower performance on irrigation and nutrient use efficiency, worker safety, pesticide stewardship, waste and recycling management and greenhouse gas production. The program has collected data for the 2015-2018 crop years and will continue into 2019 and beyond. In 2015-2016, the team developed an audit program and trained third-party GAP auditors. The first audits were conducted as a pilot in 2016 and the full audit program launched in 2017. PSI elected to pause audits for the 2018 crop year survey in order to focus on program development, including the hire of an executive director and program incorporation, but plans resume audits for the 2019 crop year.

Beginning with the creation of the PSI Advisory Committee (AC) in 2017, PSI is prioritizing work with individuals and organizations in the sustainable agriculture field. The AC is composed of four experts in sustainability, potato production, water quality and soil health, including: Amanda Raster from The Sustainability Consortium, Dr. Nora Olsen from the University of Idaho, Dr. Yefang Jiang from the Charlottetown Research and Development Centre of Agriculture and Agri-Food Canada and Dr. Carl Rosen from the University of Minnesota. PSI will continue to work closely with potato industry stakeholders to improve all aspects of the program.

In 2018, PSI developed a strategic plan and finalized a materiality assessment to identify and prioritize program impacts. Based on feedback from PSI program participants and external stakeholders, in 2019 PSI will focus on gaining grower buy in, providing a reason for grower participation beyond the buyer requirement and maximizing opportunities to tell the grower/processor/packer sustainability story.

***Ninth International IPM Symposium (https://ipmsymposium.org/2018/index.html) -*** The Ninth International IPM Symposium was held March 19-22, 2018 at the Renaissance Baltimore Harborplace Hotel, in Baltimore, Maryland, USA. Over 500 international research, education, government, industry, environmental and health professionals attended three days of presentations, networking and organizational meetings. The IPM Institute assisted volunteer planning committees in developing the meeting format, organizing more than 60 plenary sessions, and coordinating field trips and professional development sessions. Practitioner-focused sessions and mini-symposia related to hot topics in IPM were introduced for the 2018 Symposium. The IPM Institute also helped orchestrate a silent auction during the Symposium.

***Organic and IPM Working Group (organicipmwg.wordpress.com) -*** The Organic and IPM Working Group's continued goal is to align the efforts of the organic and IPM communities by building partnerships, fostering dialogue among diverse stakeholders, exchanging information,

and working toward shared priorities. The group was funded by the North Central IPM Center in 2018 and was fully funded $13,446 for 2019 to continue efforts.

The working group held an in-person meeting in March 2018 in conjunction with the International IPM Symposium in Baltimore, Maryland. Fourteen attendees were present, including five non-members. The group discussed progress and future direction, including a decision to focus on education and outreach through quarterly presentations.

In 2018, the group drafted an article for the Elsevier journal *Biological Control* on the connections between IPM and organic farming, which was submitted in early 2019. The working group will also publish a fact sheet on regenerative, resilient agriculture in conjunction with the IPM Centers.

***Public Tick IPM Working Group (tickipmwg.wordpress.com) -*** The Public Tick IPM working group provides a platform for federal and non-federal members to collaborate on tick-borne disease (TBD) control. The group has been continually funded by the North Central IPM Center since 2013 and was renewed for 2019-2020. The working group supports and coordinates a range of perspectives, including researchers, policy advocates, industry professionals, government leaders and public health professionals, that otherwise would not be sharing information.

In 2018, working group membership grew by 18 percent to 129 members. Participation has increased as TBDs spread to new geographic locations and in response to successful outreach activities to specific professional groups such as mosquito control districts and veterinarians. The group continues to hold monthly conference calls to coordinate tick stakeholder priorities. These calls average 19 participants and featured guest lectures on a range of educational and technological topics, including "iPiPE: Integrated Pest Information Platform for Extension and Education", the "Don't Get Ticked in New York" project, "Education and Awareness in Tick Pest Control" and a long-term evaluation of 4-poster and bait box control systems. 45.8% of members indicated they made at least one new professional connection through the working group and 75% agree or strongly agree that their knowledge of TBDs has increased directly due to participation in the group.

The working group also collaborated to create several resources and host multiple in-person educational and outreach programs in 2018. Information and distribution maps for the Tick Pest Alert were updated with 2018 data and made available on the North Central IPM Center website. In addition, an Integrated Tick Management (ITM) Options fact sheet was drafted by members of the group and 700 weather-proof, hard copies were printed and distributed to stakeholders and pest management professionals. An ITM presentation was given at the New Jersey Mosquito Control Association which lead to the creation of a fact sheet highlighting the importance of increasing funding for tick research and control. This fact sheet was used in a subsequent recommendation by the New Jersey Vector-Borne Disease working group Tickborne Disease

Subcommittee to the New Jersey governor on how to address TBDs. A full-day Tick Summit was held during the 2018 IPM Symposium in Baltimore featuring speakers from the Cary Institute of Ecosystem Studies, USDA-ARS, Western Connecticut State University, the University of Tennessee Health Science Center, Mainely Ticks and US Biologic. The symposium culminated with an outreach event on Capitol Hill where 31 participants attended meetings with 33 legislators to inform on the need for increased ITM and IPM funding.

***IPM and CCA Working Group -*** The IPM Institute, in collaboration with the American Society of Agronomy (ASA), formed the Certified Crop Advisor (CCA) working group in 2016 and 2017 with annual funding of $10,500, through the North Central IPM Center working group's grants program. The primary objective is to provide continuing-education articles for the ASA's *Crops & Soils* magazine, with the goal of improving IPM knowledge, skills and abilities of certified crop advisors (CCA) working in the North Central region. The articles provide information on IPM practices to the magazine's readership of 13,000 CCAs, as well as 3,000 additional members of ASA. These resources are intended to help improve CCA's ability to assist agricultural producers facing new and emerging pest-management challenges in the North Central region.

Articles published to date include, "Crop Advisors impacted by requirements in the new EPA Worker Protection Standard", "Maximizing Grower Return on Investment in Soybean Aphid Management", "*Bt* Corn and *Bt* Cotton: Valuable Tools for IPM" and "Detecting and managing new foliar corn diseases to the U.S.", and "Looking Beyond the Jug: Non-chemical Weed Seedbank Management". This project has ended and during the project period 792 CCAs completed CEUs from these articles.

***IPM Institute Board of Directors -*** Following the retirement of long-time board members Dr. James Tette in 2015, and James Cubie and Dr. Barry Jacobsen in 2017, we established a board recruitment plan to fill current gaps in knowledge. We developed a list of prospective candidates for consideration, covering a diverse range of expertise including urban entomology, housing, government/regulatory, financial management, tribal, agricultural IPM, conservation and environmental health. We compiled candidate biographies and completed diversity mapping alongside our current members list and will work with the existing board to expand membership and expertise, with a goal of recruiting two new members in 2019 and a long-term goal of recruiting four members total by December 2020.

***Other Activities***

We continue to respond to unsolicited inquiries from the food supply chain, pest management professionals, facilities, retailers, parents, school administrators and media about IPM, sustainability and pest-related issues. We maintain current content on the IPM Institute website and social media sites (e.g. Facebook, Twitter) with IPM-related news, job listings and resource links.

In addition IPM Institute:

- Provided input on pest management metrics and reporting for Field to Market's task force and board. IPM Institute developed several presentations on historical and current approaches to pest management and a methodology for a national indicators report detailing pesticide use and IPM adoption trend data using publicly-available data.

- Served on the City of Madison IPM Taskforce to review current city department pesticide usage, draft recommendations for revisions to the current IPM policy and develop best practices on pesticide use for city residents.

- Participated on the Stakeholder Committee for the Wisconsin Pollinator Protection Plan, which aims to address concerns about pollinator declines, honey bee health issues and the future of honey and crop production.

- Participated on the Project Advisory Committee for Brown Marmorated Stink Bug (BMSB) Specialty Crops Research Initiative, which focuses on sustainable, long-term management of the invasive pest BMSB via education on environmental risk factors and implementation of widespread biological control.

**PRESENTATIONS**

**2018 Presentations**

(1) Nitrogen Use Efficiency: Understanding N Movement, Timing and Rate; (2) Moving Forward with Sensor-Based Nitrogen Management; (3) Understanding the Barriers and Needs of Agricultural Retailers and Certified Crop Advisers in Providing Cover Crop Services; (4) Soil Sampling for Effective Use of Phosphorus, Potassium, and Lime with Precision Agriculture Technologies; (5) The Pros and Cons of Fall Fertilizer N Application: Optimizing Yields and Minimizing Losses in Tile Drained Fields; (6) Manure Nutrient Management Research and Best Practices to Preserve Water Quality; (7) Nutrient Management in the Age of Digital Agriculture. Partnership for Ag Resource management Webinar Series. T. Green, A. Gudjonsdottir, J. Freuck, M. Adelsperger, and C. Leahy.

Partnership for Ag Resource Management. Agricultural Retailers Association's Management Academy, Tempe, AZ. T. Green.

Ag Retailer Products and Services Improving Water Quality and Sustainability. Sustainable Agronomy Conference, Madison, WI. T. Green.

Committee on Strategic Implementation, Madison, WI. C. Leahy, T. Green, A. Gudjonsdottir.

Partnership for Ag Resource Management. Faribault County Soil and Water Conservation District, Blue Earth, MN. C. Leahy, T. Green.

Measuring and Communicating IPM Performance: Food for Thought. Field to Market, Washington DC. T. Green.

Why Brands and Retailers Need Farm-Level Sustainability Data: Use Cases for IT Solutions (Panelist). The Sustainability Consortium Summit, Chicago, IL. T. Green.

(1) Eco Apple Advanced Practice Adoption. (2) Eco Apple Protocol Review. (3) Smart Phone Apps for Eco Apple. Red Tomato Eco Apple Annual Growers Meeting. Hyde Park, NY. P. Werts and T. Green.

(1) TruEarth Grower Survey and Direct-Farm Marketing. (2) TruEarth Certified 2011 – 2017 Pesticide Risk Analysis. TruEarth Annual Growers Meeting, Winona, MN. P. Werts and T. Green.

Right to the Core! How Eco Apple Tracks and Manages Pesticide Risk. 9th International IPM Symposium. Baltimore, MD. P. Werts and T. Green.

Logistics of IPM Orchard Management. Midwest School for Beginning Apple Growers. Madison, WI. P. Werts and T. Green.

**PUBLICATIONS**
**2018 Publications**
**(Non-Refereed)**

Leahy. C., T. Green and M. Adelsperger, ed. (2018, May 8). Ohio Ag Retailers are at the Forefront of Voluntary Efforts to Improve Ohio Water Quality. Ohio AgriBusiness Association.

Leahy, C., T. Green, J. Freuck, and M. Adelsperger, ed. (2018, December 12). Variable Rate Technology Among Key Topics in New Phosphorus Loss Reduction Handbook. *Precision Ag.*

Leahy, C., T. Green, J. Freuck., and M. Adelsperger, ed. (2018, December 12). Water Quality, Nutrient Use Efficiency Among Key Topics in New Phosphorus Loss Reduction Handbook. *Crop Life.*

Leahy, C., T. Green, J. Freuck, and M. Adelsperger, ed. *Partnership for Ag Resource Management Update.* Quarterly electronic newsletter. Circulation 4686. Since 2015. http://partnershipfarm.org/newsletters/

Eisner, N., C. Leahy, T. Green, J. Filipiak, and J. Freuck, ed. Landowners and Farmers Partnering for Clean Water in the Great Lakes. Great Lakes Conservation Connect. Quarterly print newsletter.

Leahy, C. and T. Green, ed. *Developing a Sustainability Program*. Document posted in American Society of Agronomy online classroom, archived at: https://www.agronomy.org/education/classroom/classes/by-category.

Eisner, E., A. Larson, A. Loker, T. Green. Literature Review: Impact of Sustainable Agriculture Practices on Crop Nutritional Value. Anonymous national food service retailer.

Eisner, E., A. Larson, T. Green. September 2018 iPiPE Newsletter - Progress Through Sharing. Monthly electronic newsletter. Circulation 150. http://ed.ipipe.org/publications

Eisner, E., C. Leahy, J. Filipiak and T. Green. Landowner-Tenant Relationships: Creating a Dialogue. *Great Lakes Conservation Connect*. Circulation 1386.

Selfors, L., P. Werts, and T. Green. Looking beyond the jug: Non-chemical weed seedbank management. Crops and Soils 51:28-53. doi:10.2134/cs2018.51.0504

Selfors, L., P. Werts and T. Green. 2018. Detecting and managing new foliar corn diseases in the U.S. Crops and Soils 51:32-59 doi:10.2134/cs2018.51.0406

**FUNDING OBTAINED**

**2018 Grants: $168,427**

North Central IPM Center, $20,000 renewal funding to strengthen the alliance between organic and IPM.

North Central IPM Center, $20,000 renewal funding for the public tick IPM working group.

North Central IPM Center, $23,000 renewal funding for comprehensive IPM training for North Central region school districts.

North Central IPM Center, $10,427 renewal funding for the IPM and Certified Crop Advisor working group.

North Carolina State University, $95,000 in renewal funding for the Pest Information Platform for Extension and Education.

**2018 Contracts: $998,184**

Basic American, Cavendish, Lamb Weston, McCain's, Simplot, Heinz, $249,267 eighth-year renewal of management of the Potato Sustainability Initiative.

McKnight Foundation, $300,000 to activate ag retailers as champions for reducing nitrogen and phosphorus runoff from farms in the Mississippi River Basin.

American Farmland Trust, $25,250 for non-operator landowner newsletter and producer contact database to engage women non-operator landowners and lessees in the Great Lakes region.

Clean Lakes Alliance, $8,000 for increasing ag retailer sales of products and services that reduce nutrient losses from cropland in the Yahara River Watershed.

Apple IPM Programs, $69,868 in contracts with Wisconsin and Minnesota apple orchards for pest scouting services.

Wescott Orchard & Agri-Products, $50,042 for the TruEarth certification program.

Green Shield Certified Program, $32,000 in contracts with certification participants in structural pest management industry and facility management.

National Restaurant Chain, $61,000 to develop and implement survey for restaurant supply chain to identify and prioritize risks associated with pesticide use.

Red Tomato, $45,753 for the Northeast Eco Apple Project.

Sysco Corporation, $17,000 thirteenth-year renewal for management of the Sysco Sustainable Ag/IPM initiative.

National Education Association, $20,000 for Stop School Pests Program.

Apple IPM Programs, $9,700 in registration fees from Wisconsin and Minnesota apple growers for weekly AppleTalk IPM conference calls.

TruEarth Certification Program, $7,700 in certification fees from TruEarth growers.

California Cut Flower Commission, $4,010 to adapt pesticiderisk.org to pesticides applied on cut flowers in California.

SCS Global Services, $16,971 to assess pesticide risk for prohibited active ingredients using pesticiderisk.org.

University of Illinois-Champaign, $3,800 for coordination of Ninth and Tenth International IPM Symposiums.

Field to Market, $15,000 for metrics improvement for pest management and sustainability.

Wisconsin Department of Trade and Consumer Protection, $29,028 for IPM Pathways Survey for Exotic Pests.

Oregon State University, $30,000 to review pesticide active ingredients used against fall armyworm in Africa and update pesticiderisk.org database.

IPM Voice, $3,795 for the Food Narrative Project.

**2018 Unsuccessful Proposals**: **$1,419,000**
Whole Foods Market ($169,000) submitted by IPM Institute to continue management of the Responsibly Grown Rating System for its international produce supply chain.

Walton Family Foundation ($250,000) submitted by IPM Institute to "Contribute to the 45% Nitrogen Load Reduction Goal of the 2008 Gulf Hypoxia Action Plan"

Sustain our Great Lakes ($250,000) grant administered by National Fish and Wildlife Fund submitted by IPM Institute to "Increase Grower Implementation of VRT to Reduce Phosphorus and Nitrogen agrichemical losses from cropland in the WLEB"

Mosaic Company Proposal ($300,000) submitted by IPM Institute to "Work with Ag Retailers to Increase Sales and Revenues from Products and Services that Improve Water Quality"

C.S. Mott Foundation ($250,000) submitted by IPM Institute to "Target High Risk Acres in the West Lake Erie Basin to Reduce Phosphorus Runoff 40% by 2025"

USDA Sustainable Agriculture Research and Education (SARE) ($200,000) submitted by IPM Institute for "Increasing Ag Retailer Sales of Products and Services that Reduce Nutrient Losses from Cropland in the Mississippi River Basin

**2019 Objectives**
**IPM Institute General**

1. Achieve $15K net contribution to reserves.

**Sustainable Food Group**

2. Develop opportunities to expand work scopes with existing clients including development of a fresh produce program for Sysco.

3. Identify and pursue synergies between projects and clients (AFRI iPiPE, PSI, Sysco etc.) to reduce the burden of requests on growers from various buyers.

4. Develop six sets of IPM Elements, including crop and region-specific check-lists of extension-recommended IPM practices for growers; and three grower IPM surveys to measure the implementation of IPM practices over the course of the iPiPE project.

5. Develop new service to provide science-based, unbiased information to food companies in response to stakeholder inquiries about pesticides and other aspects of sustainability. Service would include a monthly newsletter and training events, including webinars and in-person meetings.

**Partnership for Ag Resource Management**

6. Grow PARM's presence, credibility and authority on market-based solutions for nutrient management in the GLB and UMRB through webinars, tools and resources, communications, and email campaigns to 5000+ member contact list. Secure private sponsorships for webinars and increase ag retailer membership base to support program.

7. Work with Clean Lakes Alliance and University of Wisconsin-Extension to develop a Yahara River Watershed *Agronomist Handbook*.

8. Expand successful Great Lakes Restoration Initiative funded variable rate technology cost-share program from the Lower Maumee, Cedar-Portage, Blanchard and Tiffin (Sandusky) Watersheds in Ohio to new priority watersheds deemed most impactful in the Great Lakes Basin.

9. Initiate cover crop incentive program in UMRB in spring 2019, obtain multi-sector surveys to track progress and compile reports.

10. Secure private funding to increase adoption of beneficial products and services throughout the US.

11. Launch updated project website in spring 2019 and P-loss risk maps by June 2019.

12. Create online communication portal for Blue Earth River Watershed retailers to help connect conservation services to grower clients.

**Pesticide Risk Tool**

13. Pursue sustainable funding for the Pesticide Risk Tool by increasing user subscriptions, donations and collaborations, including working with existing partners to meet their requirements for the use of PRT.

14. Further develop PRT to be used outside of the US with a searchable, verified database of user-submitted international products, and implement new upload formats to improve compatibility with international spray records.

15. Expand PRT's database of pesticide active ingredients and formulated products, potentially beyond those used for agriculture, e.g., turfgrass products.

**Green Shield Certified & IPM STAR**

16. Continue to recruit new participants and re-certify existing Green Shield Certified clients.

17. Facilitate program growth through improvement of public-facing resources including updated website, structural IPM resources and marketing materials, and launching the online facility manager's IPM training program. Pursue new contracts for certification of commercial and public buildings.

18. Continue to promote international growth of Green Shield Certified by working with foreign pest management professionals.

19. Work with extension school IPM projects to re-certify existing IPM STAR participants and recruit new schools to the program.

**North Central School IPM Working Group & NEA**

20. Promote the Pest Defense for Healthy Schools Training package through online and in-person delivery.

21. Cultivate sponsors and partners for the Pest Defense for Healthy Schools in the public and private industry to maintain sustainable funding and increase overall program awareness.

**Northeast EcoApple and TruEarth**

22. Facilitate certification and protocol development for Red Tomato and TruEarth eco-label programs; identify opportunities to overcome production challenges in advanced IPM for tree fruit, including brown marmorated stink bug and the loss of carbaryl for chemical-fruit thinning.

**Upper Midwest Specialty Crop Grower Services**

23. Expand the IPM Institute's specialty crop program, including implementation of scouting, calibration and food-safety planning services to meet the needs of participants in Illinois, Iowa, Minnesota and Wisconsin.

24. Expand services to include grape producers in Wisconsin through assessment of pest pressure and pest management practices used by grape growers, with funding provided by the Wisconsin Department of Agriculture Trade and Consumer Protection IPM Pathways survey.

**Potato Sustainability Initiative**

25. Expand PSI to include input from industry experts in program development and decision-making. Increase outreach to customers and growers to expand the program, including supply chain actors beyond processing.

26. Work towards Potato Sustainability Initiative priorities identified in the strategic plan and materiality assessment. These priorities include updating program mechanics to add value to participants; setting meaningful five-year goals in priority impact areas; building a robust business model and organization structure; and improving consistent

communication with everyone in the potato industry, including growers, buyers and consumers.

27. Improve grower participation in sustainability practices through awareness and resource provision.

**Ninth International IPM Symposium**

28. Work with IPM Symposium coordinators from the University of Illinois and planning committees, including the Steering Committee, Program Committee and Finance Committee, to successfully execute the Tenth International IPM Symposium.

**Organic & IPM Working Group**

29. Coordinate bimonthly Organic and IPM working group webinars. Register webinars for CCA CEU credit and work with eOrganic to publicize webinars to their contact list.

30. Begin preparations to host in-person working group meeting at MOSES Organic Farming Conference in 2020 with a minimum of 12 group members in attendance.

31. Maintain an updated website, listserv and YouTube channel.

**Public Tick IPM Working Group**

32. Organize first annual national Tick Academy with presentations from world class tick experts, and field training and management technique demonstrations to provide comprehensive and in-depth information on all areas of ITM.

33. Continue to grow membership and coordinate monthly conference calls for the Public Tick IPM working group.

**CURRENT**

**Kelly Adams:** May 2008; Co-Director of Operations: Financial and grant administration, employee services management, former School IPM Project Coordinator. Kelly has a communications/research background as an Art History major from the University of Wisconsin-Madison. She also attended certificate classes at the Nelson Institute of Environmental Studies, which fueled an interest in sustainable agriculture and environmental health issues, particularly school and community-based projects.

**Mark Adelsperger:** July 2011; Resource Management Specialist: Partnership for Ag Resource Management. Mark has a degree in Business Administration from Tiffin University in Tiffin, Ohio and a background in agriculture, sales and customer service. Mark's immersion in agriculture and enjoyment of the rural lifestyle reinforces his viewpoint that farming is an ever-evolving way of life.

**Ryan Anderson:** October 2018; Outreach Specialist; Community IPM. Ryan leads and implements the Midwest Grows Green natural lawn care initiative and supports other community IPM projects. A 2016 National Academies of Sciences, Engineering, and Medicine Christine Mirzayan Science & Technology Fellow, Ryan has extensive experience advancing science-based solutions in urban and residential communities. Ryan has a Masters of Sustainable Solutions from Arizona State University and holds a dual bachelor's degree in Biology and Electronic Journalism from Butler University. In his free time, he enjoys hiking, playing sports, and reading the next iconic fantasy novel series.

**Julian Cooper, M.S.:** January 2018; Project Manager: Community IPM. Julian received his M.S. in crop science from the University of Illinois-Urbana/Champaign, where his research identified sources of quantitative resistance to Goss's wilt in maize. His work in plant pathology introduced him to the ideas of IPM, and his desire to inform the public on the need for sustainable agriculture brought him to the IPM Institute after graduation. In his free time, Julian enjoys working out and is learning to play the banjo.

**Astrid De la Cruz**: August 2016; Coordinator: Sustainable Food Group. Astrid received her B.S. in Conservation Biology and Environmental Studies at the University of Wisconsin-Madison. Her past experiences in landscape ecology research have taught her that separate components of biological systems are deeply interconnected, something that she has realized also applies to agriculture and the food system. She believes that changing the way consumers view and interact with food can significantly impact how other sectors of the food system operate. Her other interests include cooking, gardening, painting, yoga and brewing kombucha.

**Josie Dillon:** October 2018; Coordinator: Specialty Crops IPM Program. Josie has a B.S. in Fisheries and Wildlife Biology from the University of North Dakota. Since graduating college,

she has worked in grassland ecology, climate change research, entomology and agronomy. Before joining the IPM Institute, she worked for the University of Minnesota as a researcher studying potato and soybean pests. Her interest in IPM stemmed from working hands on with growers and learning the importance of sustainable agriculture. Outside of work, Josie enjoys hiking, camping, kayaking and nature photography.

**Natalie Eisner:** October 2018; M.S., Coordinator: Sustainable Food Group & Tick IPM Working Group. Natalie received her M.S. in Entomology from the University of Wisconsin-Madison where her thesis project was to design and build a mechanized dispenser for a bio-alternative to insecticide. Prior to graduate school, Natalie assumed many roles within the agricultural value chain. Her background includes working on a family run goat farm in France, vineyard management in Sonoma, California and agricultural consulting in Tel Aviv, Israel. Her interests include travel, gardening, and tennis.

**Julia Freuck**: May 2018; Coordinator, Partnership for Ag Resource Management. Julia received her B.S. in Environmental Science and certificates in Environmental Studies and Global Health from the University of Wisconsin-Madison in 2017. Before joining the IPM Institute, Julia interned for Clean Lakes Alliance where her passion for improving environmental health and agricultural sustainability was enhanced. Her past experiences have strengthened her interest in the connection between environmental and human health. In her personal life, Julia enjoys reading, hiking, kayaking and being outdoors.

**Sharon Haberkorn**: January 2017; Office Manager. Sharon has a financial and management background working as an Operations Officer at a bank and as a Paid Audience Development Manager with a media company. She manages financial/bookkeeping and human resources. Outside of work, she enjoys spending time with family and friends, gardening and cooking.

**Mary Lannoye:** October 2018; Administrative Assistant. Mary received her BS in Sociology from UW-Stevens Point, 1974, her MS in Counseling & Guidance from UW-Whitewater, 1976, and Associate degree in Mainframe Computer Programming from Madison College, 1991. Her career crossed human services and the IT world as her degrees were completed. She briefly retired in the spring of 2018 but returned to the workforce, joining the IPM Institute as a part time administrative assistant. Outside of work, Mary loves to garden, bicycle, kayak, cross-country ski, and snowshoe.

**Ariel Larson, M.S.**: November 2013; Project Manager: Sustainable Food Group. Ariel received her M.S. in Conservation Biology and Sustainable Development from the University of Wisconsin-Madison in December 2013, with a certificate in Business, Environment, and Social Responsibility. Her research background includes weed management in the establishment of switch grass. Her interest in sustainable food production and socially responsible business led to

her work at IPM Institute, where she implements a sustainability rating system for a national food retailer and their suppliers.

**Caitlin Leahy**: June 2017; Outreach Coordinator: Partnership for Ag Resource Management. Caitlin obtained her B.S. in environmental studies with an emphasis in policy and values at the University of Wisconsin-Oshkosh. Her past research includes tropical ecosystem resource management in different regions of Belize, and alternative energy systems using bio digesters at the Viessmann Academy in Allendorf, Germany. Caitlin has a special interest in natural resource management with a focus on agriculture and wishes to extend her knowledge through continued education and travel. In her personal life, Caitlin enjoys daily hikes with her dog, Gracie, the theater, art museums, international travel, and primitive camping.

**Matt Lichty**: June 2018; Team Member: Sustainable Food Group. Matt received his B.A. in Environmental Studies and Computer Science from Knox College in Galesburg, IL. There he learned the importance of sustainable agriculture and social justice. Since graduating college, he has worked in data analysis, farming and restoration ecology. Outside of work Matt enjoys camping, hiking, practicing yoga and gardening.

**Ali Loker**: October 2016; Project Manager: Sustainable Food Group. Ali received her B.S. in Community and Environmental Sociology and a certificate in Global Health. Her interest in sustainable agriculture began after an internship on an organic vegetable farm during college. Since then, she has continued to work in food systems with an emphasis on social justice and community engagement. Outside of work, Ali enjoys trail running, experimenting with fermentation and trivia.

**Gabriel Schaffner:** October 2018; Team Member: Sustainable Food Group. Gabriel earned his BA in Environmental Justice and Citizenship, with a minor in Political Science from Beloit College, where he also worked on the campus sustainability program. He has a strong interest in the interconnectedness of economic systems, environmental systems and social justice. In his free time, Gabriel can be found seeing live music, camping, exercising, enjoying the company of dogs or playing the occasional videogame.

**Cole Schmitt**: May 2017; Junior Front End Developer: pesticiderisk.org. Cole received a B.S. in Community and Nonprofit Leadership from the University of Wisconsin-Madison. After graduation, he began coaching wrestling and completed the Software Development course at devCodeCamp. When not at work or coaching, he enjoys hiking, reading, and art.

**Daniel Skolnik:** December 2013; Senior Software Engineer, pesticiderisk.org. Daniel received a B.S. in Engineering and a Master's degree in Information Technology, both from the University of Wisconsin. Daniel gained software development experience working with a NASA sub-contractor and working on vision software for manufacturing and quality control applications.

His present focus is primarily on the software that runs the Pesticide Risk Tool (PRT). His interests include biking, cooking, golf and skiing.

**Michele Wigern:** September 2018; Resource Management Specialist, Partnership for Ag Resource Management. Michele earned a B.S. in Environmental Management from South Dakota State University and has worked in conservation for the past eight years in south central Minnesota. Most recently, Michele worked with agricultural producers to implement conservation practices to increase soil health, yields and profits. Outside of work Michele enjoys golfing, fishing, and keeping up with her two very active boys.

**Peter Werts:** May 2009; Project Manager, Specialty Crops IPM Program. Peter has a B.S. in Environmental Studies from Northland College in Ashland Wisconsin. Before coming to the IPM Institute he worked as one of the regional interns with the Wisconsin Eco-Apple project in the Bayfield region. His interest in IPM has been a natural progression building upon his knowledge and skills from his days working on the fruit farms in Bayfield Wisconsin while in college.

**Paige Wettach:** March 2018; Coordinator: Sustainable Food Group. Paige received her B.A. in Communication Studies from Luther College and M.A. in Social Innovation and Sustainability Leadership from Edgewood College. Before joining the IPM Institute, she spent two years serving as an AmeriCorps volunteer in Northeast Iowa working in schools and rural communities to further sustainability efforts through education, gardening, and local food procurement. In addition to gardening, she is also interested in social and economic sustainability and their importance in larger systems. Outside of work, her interests include baking, gardening, podcasts, and any outdoor activity.

**Ida Yu**: January 2017; Coordinator: pesticiderisk.org and Potato Sustainability Initiative. Ida received her B.A. in Computer Science and Psychology, with a minor in Global Sustainability, from the University of Virginia. Following graduation, she moved into sustainable food, working at a small diversified vegetable farm and with food/sustainability-focused nonprofits. In her free time, she can be found baking layer cakes, playing board games, running, and canning.

**Madeline Zastrow:** August 2017; Coordinator: Community IPM. Madeline is responsible for the daily operations of the Green Shield Certified program and assists with the development of other Community IPM projects. She received her B.A. in Geography, Environmental Studies and Spanish at the University of Wisconsin-Madison. Madeline further developed her passion for improving environmental and community health while working as a program evaluator for a nonprofit dedicated to farm-to-school education and community sustainability. Her interests include painting, watching Sunday night HBO and meeting up with friends at the Spanish conversation table in Madison.

**SEPARATED**

**Thomas Bernard:** May 2014 – October 2018; Coordinator: Specialty Crops IPM Program. Thomas received his B.S. in Environmental Studies with a directed study in sustainable horticulture from Northland College in Ashland, Wisconsin. After graduation he guided sea kayakers on Lake Superior, built mountain bike trails in the Chequamegon region, and found his way to a well-known orchard in Bayfield, WI. While serving on the orchard's management team for two seasons, he developed a keen interest in the complexity of tree fruit production and found a source of understanding through the application of IPM technology.

**Erin Gray Daly:** October 2017- August 2018; Administrative Assistant. Erin received a B.S. from UW Madison in Agriculture and Applied Economics and Environmental Studies. After graduation, Erin worked in a local greenhouse where she was able to work hands on and learn about native plant species. She is interested in how large-scale agriculture damages ecosystems, and how to utilize the market to make agriculture more sustainable while protecting local resources. When Erin is not working you can find her teaching ballet, baking, or curled up with a book

**Alina Eva Freund**: July 2016-January 2018; Project Manager: Community IPM. Alina was responsible for the strategic direction of a suite of projects that improve health and environment in our communities and make schools healthier places for children. She also oversaw certification programs for Green Shield Certified and IPM Star for schools. Before moving to the United States, Alina worked for international organizations that focus on sustainability in global food and wood products supply chains, and managed projects on market research.

**Anna Gudjonsdottir**: January 2017-May 2018; Coordinator: Partnership for Ag Resource Management. Anna received her B.A. in Biology and Environmental Studies from Luther College in 2015. Her previous research experience includes investigating the evolution of MDR bacteria produced from CAFO manure runoff and exploring the effects of harvesting regimes on insect diversity. She hopes to continue to contribute to sustainable resource management to protect our shared water resources. In her free time, Anna enjoys backpacking, reading, trivia, and playing with her dog Luna.

**Clare Johnson**: Summer 2018; Intern: Sustainable Food Group. Clare will receive her B.A. in Geology and Biology in May 2020, from Macalester College. This summer, she conducted environmental magnetism research with a professor at Macalester. Their objective is to identify the various magnetic components in the soil and understand how they compare with the various ways this soil has been used over the decades. In the Spring 2019, Clare will attend the University of Otago, in Dunedin, New Zealand, to continue her geological studies. Her interests include spending time with friends and family, camping, ceramics, traveling and being outdoors.

**Margaret Johnson**: Summer 2018; Intern: Sustainable Food Group. Maggie earned her B.A. in Chemistry and French from Smith College. She worked as an English teaching assistant on the TAPIF program in Rennes, France in high school science classes for the past two years. In the fall, Maggie will begin graduate studies in Engineering and Geosciences for the Environment at the Université de Strasbourg/Ecole Nationale du Génie de l'Eau et de l'Environnement (National School for Water and Environmental Engineering). Her interests include biking/bike-camping, going on picnics, and learning about cultures and languages by traveling.

**Frank Laufenberg:** September 2016-October 2018**;** Coordinator: Sustainable Food Group, Public Tick Working Group. Frank received his B.S. in Environmental Sciences as well as Community and Environmental Sociology from UW-Madison. In short, Frank enjoys anything that involves ecology and humans. Working as Urban Ag Director for a student organization Frank realized the power that sustainable agriculture and food has to connect physical and social science. He further pursued the research side of organic agriculture as a field assistant in Dr. Erin Silva's lab. Outside of work Frank is an avid musician and gardener.

**Erika Nickels**: August 2015 – August 2018; Audit Coordinator: Sustainable Food Group. Erika received her B.S. in Sociology and Environmental Studies from the University of Wisconsin-Madison. Growing up her parents owned a local restaurant which is where she developed an interest in sustainable food systems. In her free time, you can find Erika hiking, camping or eating sweet potatoes.

**Liam Selfors:** May 2018 – September 2018; Team Member: Specialty Crops IPM Program. Liam received a B.S. in Life Sciences Communication from the University of Wisconsin-Madison where he kindled a passion for science writing. In his personal life, Liam enjoys playing music, rock climbing and cooking.

**Christian Steponitis**: July 2016 – April 2018; Media Outreach Specialist: IPM Symposium, Sustainable Food Group. Christian received his B.S. in Agronomy from the University of Wisconsin-Madison and has spent time working in both the field and the lab for University funded research. In doing so he has learned that there is a lot more to farming than just planting and harvesting. His other interests include writing music, gardening and skateboarding around campus.

Great Lakes Conservation Connect

Landowners and Farmers Partnering for Clean Water in the Great Lakes

May 2018

# Now is the Time to Assess Your Land

Regular assessment of your land can help you identify opportunities to improve its production and conservation value. There's no better time than the present as improving small things can prevent serious problems in the years to come.

Spotting opportunities to improve your land value is easier than you might think. Visit with your farm operator about what they see in the field or walk the land yourself to look for eroding stream banks, loss of topsoil or other notable features. Check out the land use options below for a glimpse into some of the things that you might look for and learn about more opportunities for enhancement.

## Crop Land

The most essential element of good crop land is soil health. Managing the flow of water across the land is critical for maintaining valuable topsoil and crop nutrients.

Watch for these potential problems:

- Signs of soil erosion in the field
- Eroding waterways and streambanks
- No edge of field habitat for wildlife

*A grassed waterway guides water down the slope, protecting the underlying soil from eroding.*

Soil testing, nutrient management, and crop rotations should all be considered for good crop production and environmental protection. Practices like no-till farming, cover crops and grassed waterways build soil organic matter while preventing erosion.

Consider wildlife needs in your planting, too. Land that's too wet, too steep, erosion prone or too infertile to produce optimal crops may be better suited for a meadow, wetland or pollinator habitat. Even narrow strips of habitat along field edges can dramatically increase pollinator diversity.

## Grazing Land

High quality pasture lands provide a diversity of forage for cattle, horses or other grazing animals.

Degrading pastures often contain these potential problems:

- Overgrazing
- Gullies, and livestock in streams
- Invasive species and other weeds

If your land is grazed, help ensure pastures are rested periodically by breaking up large pastures into smaller pastures that you rotate the livestock through to recharge grasses and legumes.

*Fencing cattle out of streams keep animal waste our of the creek and reduces erosion of the streambed and banks.*

Severely overgrazed pastures may also have excessive weeds or invasive plants that out-compete the forage you want. You'll want expert advise on how to identify and rid the pasture of damaging invasives.

Pastures may also need more lime or phosphorus, just like your lawn, to be more productive. Fire is another option to recharge some species and be sure to fence cattle out of streams.

## Forest Land

You have a problem if your forest is too dense to walk through, draped in vines or lacks a shrubby under story. Managing forestland starts with knowing what kind of forest you have and developing a plan to meet your goals.

Watch for these potential problems:

- Densely growing trees
- Lack of under story vegetation
- Infestations of vines such mile-a-minute, porcelain berry or grape

You can't be expected to know all the species of trees in a forest or what constitutes a good mix, so don't hesitate to ask a professional forester for help. You can start by making an initial assessment of trees and land cover. Take note of distinct browse lines and lack of a shrubby under story that might indicate an over-abundance of deer. Look out for invasive plants that out-compete native trees such as vines, tree of heaven and Japanese stilt grass – especially in forest openings where more light can penetrate.

Herbicides and canopy shading can help control vines and other invasives and reducing the deer population through hunting can help to bring back your under story vegetation.

Removing unwanted vines and trees can free up desirable trees like oak and hickory to grow better. The safest and most efficient way to remove unwanted vegetation is often to kill them and leave them standing. This can be done through the use of a herbicide or by cutting or girdling the trees.

*Your forest land should be easy to walk through and not be draped with vines.*

## Recreational Land

If hunting, wildlife watching or simply enjoying the peace and beauty of your land is important, consider enhancing the wildlife habitat. Good habitat management will attract game and non-game species alike, but you can also enhance specific features to attract desired species, if that is your goal.

If you have forest edges, consider 'softening' them with a buffer of shrubs and grasses. Open areas? Consider planting them to warm season grasses or allowing them to progress to shrubby habitat for better bird and pollinator habitat. Forest? Use hunting to reduce deer browse and work to ensure a healthy density and mix of native tree species. If you have a stream, consider enhancing the riparian areas with trees, shrubs, and grasses that provide habitat while stabilizing and cooling the stream.

Watch for these potential problems:

- Invasive species
- Signs of soil erosion
- Water moving over the land in damaging patterns

*A stream shaded by riparian trees cools water temperature, providing a desirable habitat for aquatic life.*

## Additional Learning Circles Scheduled for Women

We are excited to announce that we have scheduled two different learning circles for this month. The cost to attend a learning circle is $10 and includes lunch. If you are interested in attending one of these learning circles, you can register on our website www.farmland.org/women or by calling 866-792-6248.

### Ohio Learning Circle

### Farming for Clean Water

May 22, 2018 from 9am – 3pm

Northwest Agricultural Research
Station OARDC
4240 Range Line Road
Custar, OH 43511

Have you ever wondered how certain farming practices can impact water quality? Do you know how water moves through and over your farmland and if this is causing a positive or negative impact on water quality? Attendees will gain an understanding of the basic practices that will help retain nutrients in your fields while preventing them from becoming runoff that can have a negative effect on water quality.

### New York Learning Circle

### Taking a Holistic Approach to Managing Your Land

May 24, 2018 from 9am – 3pm

Sinclair Farm
2368 Milroy Road
Piffard, NY 14533

Have you ever wondered what your woods can do for you? During this session, we will be joined by a forester, who will share information about woodlot management and timber contracts. Attendees will also gain an understanding of soil types and soil health as well as the effect compaction can have on their land. In a final discussion, we will talk about drainage and about how the installation of tile drains can greatly impact the productively of your land. This day will take place 'on the farm' so that attendees can 'discuss' but also 'see' what we will be talking about throughout the day so dress appropriately!

If you are unable to attend but would like to receive the handouts from the learning circle in your state, please fill out the enclosed card and return to us.

## Great Lakes Conservation Connect -- *Connecting You with the Information You Need*

Great Lakes Conservation Connect is a partnership of conservation agencies that care about protecting and preserving our natural resources in the Great Lakes area. The partnership was formed to reach out to non-operator landowners and connect them with information available to help them maintain and improve the natural resources on their land and water quality in the Great Lakes.

Cultivated cropland is a major contributor of excess nutrients and soil sediments polluting the Great Lakes. The good news is that there are proven conservation practices that can reduce the amount of nutrients and sediment lost to the streams while maintaining or improving profitability of the land. We will strive to provide information to landowners to significantly improve water quality while sustaining their land long into the future.

If you are a landowner interested in natural resources conservation and water quality and want to learn more about available programs, resources and support in your area, Great Lakes Conservation Connect is here for you.

American Farmland Trust
SAVING THE LAND THAT SUSTAINS US

Cornell Cooperative Extension
Northwest NY Dairy, Livestock and Field Crops Program

Wood Soil & Water Conservation District

Published October 4, 2018

American Society of Agronomy–IPM Institute of North America

Integrated Pest Management Series

# Looking beyond the jug:

## Non-chemical weed seedbank management

Growing reports of new herbicide-resistant weeds call for a reassessment of weed management strategies in row crops. This article will explore several non-chemical weed management strategies including current practices for limiting the weed seedbank in row crops at harvest. Earn 1 CEU in Integrated Pest Management by reading this article and taking the quiz at www.certifiedcropadviser.org/education/classroom/classes/608.

**By Liam Selfors**, Team Member, **Peter Werts,** Specialty Crop IPM Project Manager, and **Thomas Green**, Ph.D., CCA, TSP and President, IPM Institute of North America

Fluctuations in yield can greatly impact profitability for growers. Weed interference in fields with no weed control was shown to cause average yield losses of 52% in corn (Soltani et al., 2016) and 49.5% in soybean (Soltani et al., 2017) based on data from 2007 to 2013. Since the first selective herbicide was introduced to the agricultural market in 1948 (Quastel, 1950), herbicides have become synonymous with effective and economically viable weed control. Herbicides will certainly continue to be part of the weed management tool box. However, according to Dr. Tom Barber, Extension Weed Scientist at the University of Arkansas Division of Agriculture, growers need to begin "looking beyond the jug," by including non-chemical practices and seedbank disruption in weed management programs.

According to the International Survey of Herbicide Resistant Weeds, there are currently 495 unique instances of herbicide resistance in 255 weed species globally. Weeds have evolved resistance to 163 different trade-name herbicides, spanning 23 of the 26 known sites of action (Heap, 2018). Herbicide modes of action target a specific biological process or enzyme to disrupt normal plant growth and development (Armstrong, 2009). "We've come to the realization in several crops that our long-term weed control sustainability is not going to come out of a chemical," Barber says.

doi:10.2134/cs2018.51.0504



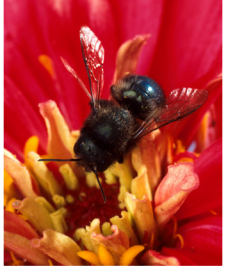



**Far right:** Kochia weeds extruding through a lentil crop. **Inset:** Roller crimpers are large weighted cylinders with a blunt edge and chevron pattern for cover crop termination. Some growers include roller-crimping in a single pass during planting.

In response to increasing reports of herbicide resistance, growers have adopted best management practices to delay resistance such as maintaining diversity in herbicide selection and rotating herbicide modes of action between applications, but this approach alone is not sustainable. For about 20 years, there have been no major new modes of action introduced to the marketplace, and there is no clear timeline for the introduction of new modes of action (Duke, 2011). "We have Palmer amaranth (*Amaranthus Palmeri*) populations in Arkansas that are resistant to up to four different herbicide modes of action," Barber says. "We're quickly running out of options from an herbicide perspective."

Dr. Tim Seipel, Assistant Research Professor at Montana State University, suggests the key is "to limit the buildup of the weed seedbank, especially if there are multiple resistant weeds present." A field's seedbank is the reservoir of viable seeds in the soil (Christoffoleti and Caetano, 1998). The seedbank can vary widely in density and diversity and will ultimately drive annual weed persistence (Buhler et al., 1997). New introductions typically drift from external sources, and seed dispersal by established weeds can multiply that species' seed density in the seedbank. "Any time we can reduce that soil seedbank, we're winning the battle against weeds."

## Diversifying weed selection pressures

Applying an herbicide can reduce the number of seeds entering the seedbank. "If you have multiple herbicide-resistant weeds in the seedbank, you're constantly selecting for those weeds because all the other weeds are being killed by the herbicide," Seipel says. "If you come at it with different tools, like cover crops or crop rotation, then you're introducing a new selection pressure." Each new unique selection pressure added not only combats weed persistence, but will equally target the herbicide-resistant weed strains. "If it doesn't have competition, a Palmer amaranth plant can produce upwards of a million seeds per plant," Barber says. "With the competition in an average soybean field, we might see 100,000 to 300,000 seeds per plant. Still, it doesn't take many plants producing seed numbers like that for populations to get out of control."

For small-scale farmers, weeding fields by mowing, hoeing, or hand-pulling may be plausible, but some growers reported spending up to $150 per acre in labor to remove multiple-herbicide-resistant Palmer amaranth or pigweed by hand. Tillage can markedly reduce weed population densities but may cause erosion, increase greenhouse gas emissions, and reduce soil moisture levels (Demjanova et al., 2009). Barber says many farmers have "gone from full tillage numerous times during the year to a reduced or even no-till situation." He adds that we are now "seeing tillage come back due to the resistance issue."

Mechanical weed control may become more economically viable in the future with the implementation of vision-based intelligent weed-removal robots for both organic and conventional agriculture systems. "The costs and efficiency of automated weed-removal systems are complex," says Frank Poulsen, Manager at F. Poulsen Engineering. "Vegetable farmers in Europe [using intelligent weed removal] for substituting manual labor have

reported earning the cost of the machine in one to two years, but this information is not based on data from research." Poulsen is collaborating with a university and a research organization in Denmark to gather hard data on crop, time, method (thermal or mechanical), machine parameters, capacity, and price, according to Poulsen. He expects to publish the results in two years.

Knowledge of the differences in biology and phenology between crops, weeds, and the surrounding ecosystem can be incorporated into integrated weed management programs. With planting date and weed life cycles in mind, cover crops can outcompete weeds and limit seedbank entry. Crop rotations effectively manage weeds by changing conditions in the field, thereby altering selection pressure. This can come in the form of competition from other weed species, alternating planting and harvest timing and soil disturbance, light transmission through crop canopies, and habitat for natural weed enemies (Lamichhane et al., 2016). The goal is to "optimize a rotation that maximizes economic return and minimizes seed introduction to the seedbank," Seipel says.

Many farmers already fit cover crops into their rotations to prevent soil erosion, conserve soil moisture, increase organic matter, and enhance soil health, but careful planning can provide additional weed-management benefits. "You want to have a highly competitive cover crop that's competing at the same time as the weed," Seipel says.

Lentils are a notoriously non-competitive cover crop option compared with peas or oats whose biomass and soil moisture needs apply greater competitive pressure on weeds. Cover crops can rapidly become uncontrollable weeds if they aren't terminated before planting. To reduce the use of burndown herbicides for cover crop termination, mechanical rolling or roller-crimping effectively limits regrowth in some cover crops, including barley, cereal rye, and hairy vetch. When the cover crop reaches pollen shed, roller crimpers can reduce the chances of plant return by snapping stems with a blunt edge without severing the stems. The thick mat of cover crop biomass from roller-crimping can effectively inhibit weed growth in no-till cropping systems (Davis, 2010).

Current research by Dr. Seipel explores forage cover crops and targeted grazing. Farmers can install electric fences and introduce livestock that will graze weeds alongside the cover crops. "There are no negative health effects on the animal, and the farmer gets weed control," Seipel says. Benefits of targeted grazing with a forage cover crop include competition pressure against weeds, production of forage, diversification of land use, livestock feeding, efficient manure distribution, and reduced herbicide costs and resistance risks. "Timing of the grazing and timing of the termination of the cover crop are going to be really important to make sure they're outcompeting weeds at the right time to reduce seed production," Seipel adds.

"There's great potential to use integrated weed management tools and cover crops, but I think we need to be very deliberate and careful to really maximize their benefit," Seipel says. Soil-moisture effects of cover crops and crop rotations can impact net yield potential (Lamichhane et al., 2016). The most effective control methods vary by region and are designed around problematic weed species and available resources. The most effective weed-management programs will utilize several non-chemical techniques to support and prolong safe herbicide use, according to Seipel. "In the long run, if you think about it evolutionarily, we really want to combine a few tactics together because that will give us longer use of our herbicides in the future."

**Below:** A barley–pea forage crop one week after grazing. Grazing removed most biomass and limited seed production of wild oat and kochia weeds. **Right:** Using sheep grazing to terminate forage cover crops and remove weed biomass.

## Seedbank management options at harvest

Commercial combine harvesters increase contribution to the weed seedbank from weeds like Palmer amaranth,



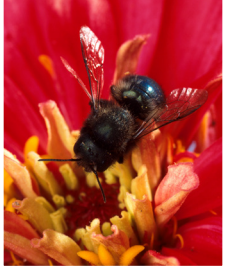


which has seeds that are retained through harvest (Lazaro et al., 2017). This peak in seedbank contribution also presents an opportunity to reduce weed-seed retention through a low-cost and highly effective combine adjustment, as an alternative to herbicides (Walsh et al., 2017).

Combines separate plant material, or chaff, from the crop during harvest. If weed seeds are retained at harvest, spreading chaff to reintroduce plant residue will also greatly increase distribution of weed seeds. A chute can be easily fitted to the combine to control chaff into narrow lines. The process, called chaff lining or chaff tramlining, creates a poor environment for weed seed establishment and persistence. Many weed seeds will rot or be outcompeted. Windrows can also be burned to destroy weed seeds and further limit seedbank buildup.

"There are a lot of areas where farmers are unable to burn that chaff because of proximity to towns and houses," Barber says. "Instead of burning the windrow, chaff can be gathered in a cart and hauled out of fields." Chaff carts are common in Australia as a collection and transfer mechanism for weed seeds. Some farmers utilize a bale-direct system that captures weed seed and straw material in bales that can be removed and fed to livestock. Research on annual ryegrass weeds in Australian dryland crops showed conventional chaff removal systems diverted up to 95% of seeds from the seedbank (Walsh and Powles, 2007). However, "If you can't get it burned before the dew hits or if you get a shower during the night, then chaff can be very difficult to burn," Barber warns.

Narrow-windrow burning, chaff carts, and direct balers are all effective weed seedbank management options, but aggressive residue removal can deprive soil of important nutrients like nitrogen and potassium, often leading to additional fertilizer inputs to overcome these deficiencies. An alternative approach is to mechanically destroy weed seeds and allow viable-seed-free residue to be safely left on the field.

The integrated Harrington Seed Destructor (iHSD), developed in Australia, uses a cage mill and chaff-transfer system to intercept seed-containing crop residue from the harvester and mechanically destroy the embedded weed seeds during harvest. The iHSD mill has proven to be highly effective at destroying seeds of common weeds in U.S. soybean and rice production systems (Schwartz-Laza-

A combine making wheat windrows in Newport, AR. Windrows can be left to rot or burned to destroy weed seeds in the chaff.

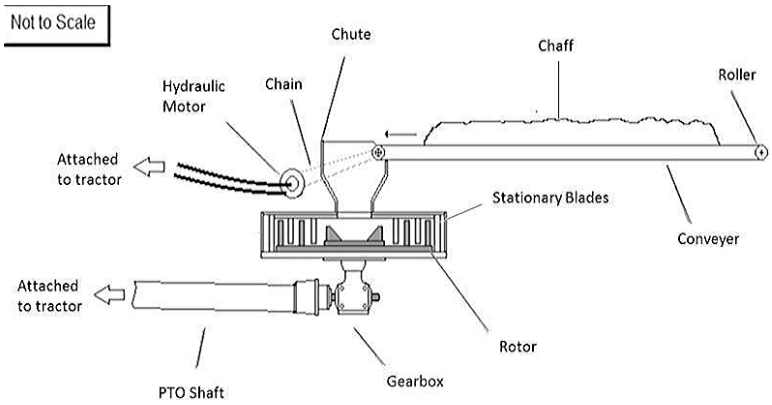


The integrated Harrington Seed Destructor (iHSD) utilizes the tractor's hydraulic system to feed chaff into a chute where rotating blades grind crop residue into a fine powder, erasing seed viability. Watch the iHSD in action here: https://youtu.be/MU-atcUQ_ZI.

ro et al., 2017); however, it is not yet commercially available in the U.S. Dr. Barber expects widespread adoption of the iHSD for weed control in the U.S. once the machine has begun to be manufactured for American harvesters. Although the upfront and maintenance costs of the iHSD are much higher than other harvest weed seed management tools, Barber believes its seedbank-limiting abilities will make the investment worthwhile.

Barnyardgrass, a weed very familiar to rice growers in the southern U.S., "releases its seeds before the rice crop is mature enough to harvest. In that type of situation, our harvest weed-control methods are not going to work in their current form," Barber says. A weed management program that diversifies selection pressures year-round is a higher priority for these growers who target weeds that release seeds before harvest.

## Conclusion

Incorporating non-chemical weed-management tactics can provide good control at a vary low cost, enabling farmers to easily adopt alternative options and escape herbicide reliance. Farmers with target weeds that release seeds after harvest can proactively reduce herbicide reliance by reducing the size and interference of weed with harvest seedbank control tactics. Dr. Barber encourages farmers to adopt a zero-tolerance program for weed management. "If you see a Palmer amaranth, you don't let it go to seed," he says. Typically, "after three years of preventing seed from entering the seedbank, we have a much more manageable population."

With careful consideration, Dr. Seipel believes a non-chemical weed management program could be almost as good as herbicide-only systems for weed control. "As the need for tools other than herbicides continues to increase, integrated weed management will certainly be more economically viable in the future." &

*See References on page 53.*

# Patel named Prairie Province

## CCA of the year for 2017

**Rahulkumar Patel,** CCA and Agronomist at Pioneer Coop Association Ltd., Shaunavon, SK, Canada was named 2017 Prairie Province CCA of the Year. The award recognizes a CCA who delivers exceptional customer service, is highly innovative and a leader in his/her field, and has contributed substantially to the exchange of ideas and the transfer of agronomic knowledge within the agriculture industry.

Patel immigated to Canada from India in 2007 and worked with the Ontario Ministry of Agriculture before joining the Shaunavon Co-op in 2012. He helps farmers in the region make better agronomic decisions and achieve sustainable crop production . He has a master's of science and a Ph.D. credit study in Plant Pathology and Agricultural Entomology from India. &

doi:10.2134/cs2018.51.0512

# Weed seedbank [continued from p. 32]

## References


Armstrong, J. 2009. Herbicide how-to: Understanding herbicide mode of action. Oklahoma State University, Division of Agricultural Sciences and Natural Resources, Oklahoma Cooperative Extension Service.

Buhler, D.D., R.G. Hartzler, and F. Forcella. 1997. Implications of weed seedbank dynamics to weed management. Weed Science 45(3):329–336. https://www.jstor.org/stable/4046027?seq=1#page_scan_tab_contents

Christoffoleti, P. J. and R.X. Caetano. 1998. Soil seed banks. Scientia Agricola 55:74–78. http://dx.doi.org/10.1590/S0103-90161998000500013

Davis, A.S. 2010. Cover-crop roller–crimper contributes to weed management in no-till soybean. Weed Science 58:300–309. https://naldc.nal.usda.gov/download/45407/PDF

Demjanova, E., M. Macak, and I. Daloviicc. 2009. Effects of tillage systems and crop rotation on weed density, weed species composition and weed biomass in maize. Agronomy Research 7:785–792.

Duke, S.O. 2011. Why have no new herbicide modes of action appeared in recent years? Pest Management Science 68(4):505–512. https://doi.org/10.1002/ps.2333

Heap, I. 2018. The International Survey of Herbicide Resistant Weeds. www.weedscience.org/default.aspx

Lamichhane, J.R., Y. Devos, H.J. Beckie, M.D. Owen, P. Tillie, A. Messean, and P. Kudsk. 2016. Integrated weed management systems with herbicide-tolerant crops in the European Union: Lessons learnt from home and abroad. Critical Reviews in Biotechnology 60(5). http://dx.doi.org/10.1080/07388551.2016.1180588

Lazaro, L. M., J.K. Green, and J.K. Norsworthy. 2017. Seed retention of Palmer amaranth (Amaranthus palmeri) and barnyardgrass (Echinochloa crus-galli) in soybean. Weed Technology 31(4):617–622. doi:10.1017/wet.2017.25

Quastel, J.H. 1950. 2,4-Dichlorophenoxyacetic Acid (2,4-D) as a selective herbicide. In Agricultural control chemicals. American Chemical Society, Montreal. doi:10.1021/ba-1950-0001. p. 244–249.

Schwartz-Lazaro, L.M., J.K. Norsworthy, M.J. Walsh, and M.V. Bagavathiannan. 2017. Efficacy of the Integrated Harrington Seed Destructor on weeds of soybean and rice production systems in the southern United States. Crop Science 57:2812–2818. doi:10.2135/cropsci2017.03.0210

Soltani, N., J.A. Dille, I.C. Burke, W.J. Everman, M.J. VanGessel, V.M. Davis, and P.H. Sikkema. 2016. Potential corn yield losses from weeds in North America. Weed Technology, 30(4):979–984. https://doi.org/10.1614/WT-D-16-00046.1

Soltani, N., J.A. Dille, I.C. Burke, W.J. Everman, M.J. VanGessel, V.M. Davis, and P.H. Sikkema. 2017. Perspectives on potential soybean yield losses from weeds in North America. Weed Technology 31(1):148–154. https://doi.org/10.1017/wet.2016.2

Walsh, M.J., J.C. Broster, L.M. Schwartz-Lazaro, J.K. Norsworthy, A.S Davis, B.D. Tidemann et al. 2017. Opportunities and challenges for harvest weed seed control in global cropping systems. Pest Management Science. https://doi.org/10.1002/ps.4802.

Walsh, M.J., and S.B. Powles. 2007. Management strategies for herbicide-resistant weed populations in Australian dryland crop production systems. Weed Technology, 21(2):332–338. www.jstor.org/stable/4495856?seq=1#page_scan_tab_contents

Published online July 12, 2018
American Society of Agronomy–IPM Institute of North America
Integrated Pest Management Series

# Detecting and managing new foliar corn diseases in the U.S.

Undetected or misdiagnosed crop diseases can pose significant economic threats, especially when dealing with corn, a worldwide staple crop and the most widely produced feed grain in North America. Two foliar corn diseases, tar spot and bacterial leaf streak, were confirmed for the first time in the U.S. within the last three years, and both spread rapidly to additional states. This article addresses detection, diagnosis, and suggested IPM practices. Earn 1 CEU in Integrated Pest Management by reading this article and taking the quiz at www.certifiedcropadviser.org/education/classroom/classes/600

**By Liam Selfors**, Team Member, **Peter Werts,** Specialty Crop IPM Project Manager, and **Thomas Green**, Ph.D., CCA, and TSP, President, IPM Institute of North America

## Tar spot complex of corn

The tar spot complex, named after the dark-brown lesions that form beneath the epidermis of infected corn leaves, was first confirmed on Mexican corn (*Zea mays* L.) crops in 1904 (Hock et al., 1992). Symptoms are caused by synergistic interactions between two main fungi, *Phyllachora maydis* and *Monographella maydis*; however, the interaction mechanics between the pathogens and the host remain unclear beyond a strong conjecture that the parasite and host have coevolved for centuries prior to discovery (Ruhl et al., 2016).

The disease has become one of the most important foliar corn diseases in Central and South America, where yield losses sometimes exceed 50% annually (CGIAR, 2016), regularly affecting Bolivia, Colombia, Costa Rica, Dominican Republic, Ecuador, El Salvador, Guatemala, Haiti, Panama, Mexico, Nicaragua, Peru, and Puerto Rico. Severe outbreaks in the northern provinces of Guatemala led to estimated yield losses of up to 75% in the 2008–2009 season. Geographic trends in disease severity in the region suggest the disease favors cooler temperatures and

doi:10.2134/cs2018.51.0406



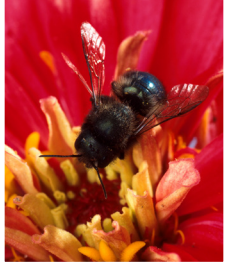



**Far right:** Tar spot infection in a Michigan corn field. **Inset:** Darkly colored fruiting bodies of *Phyllachora maydis* form beneath corn-leaf epidermis. Source: Dr. Martin Chilvers.

higher elevations with high relative humidity (Chalkley, 2010).

After multiple introductions of *P. maydis* to the continental U.S. via shipments from Guatemala or Mexico to New York, NY; Miami, FL; and San Diego, CA were intercepted (Cline, 2005), the fungus was eventually detected on American-grown corn for the first time in early September 2015 by the Purdue Plant and Pest Diagnostic Lab. Several small, black circular and raised structures on hybrid corn leaves collected from Indiana and Illinois were officially confirmed as *P. maydis* by the USDA-APHIS in Beltsville, MD (Ruhl et al., 2016). In 2017, the disease was again found in those states plus Iowa, Florida, Michigan, and Wisconsin (McCoy et al., 2018).

Upon infection, corn leaves develop *P. maydis*'s trademark elliptical "tar spots," growing between 0.5 and 11 mm in size as the fungus matures. *Monographella maydis* usually appears within a week, causing a "fisheye" pattern of necrosis, or cell death, in surrounding leaf tissue that can affect an area 10 to 30 times larger than the initial tar spot (Hock et al., 1992). *Phyllachora maydis* infections alone haven't been associated with yield reduction; researchers believe *M. maydis* is responsible for the significant economic losses caused by the complex in Central and South America (Hock et al., 1995). *Monographella maydis* may be present in the U.S. but has not yet been detected.

Both fungi are classified as ascomycetes by the sac or "ascus," which contains the organisms' reproductive bodies known as "ascospores." The brown spots that develop on infected leaves are the fruiting bodies, or ascomata, of *P. maydis*, which grow beneath the leaf surface. These fruiting bodies typically discharge their ascospores after periods of rain or very high relative humidity. Ascospores will collect in glutinous masses that can be dispersed up to 246 ft by rain or wind. Infected husks and leaves are suspected to be the main mechanism of transport since no seedborne aspects of the disease have been observed (Chalkley, 2010). The fungi are capable of surviving winter conditions as ascospores, which can infect nearby plants when spring weather returns. *Phyllachora maydis* is an obligate parasite to corn, which means the ascospores require a corn host plant to grow and reproduce.

Although specific favorable conditions for the complex haven't been confirmed, the pathogens appear to thrive under relatively cool temperatures ranging from 62 to 68°F, a mean relative humidity of more than 75%, and an average of seven hours of leaf wetness per night. The highest windborne ascospore count for *P. maydis* occurred during a period of 85% relative humidity during Mexico's most severe infection, in 1988 (Hock et al., 1995). Regions that match favorable conditions tend to be moderately cool and humid tropical and subtropical mountainous areas 4,265 to 7,546 ft above sea level, with free moisture on leaves at night and in the mornings. (Mahuku et al., 2013).

According to Dr. Martin Chilvers, field crop pathologist and assistant professor at Michigan State University, the complex would likely behave very similarly in the U.S., but differences in climatic conditions may impact severity. Historically, the disease has not been as prevalent during hot periods in subtropical areas but picks up as temperatures drop or at high elevations. This evidence suggests the complex might favor the northern U.S. over warmer central and southern states. The highest-severity infections of *P. maydis* in the U.S. have occurred along tree lines or in cooler, moister areas, making these prime locations for scouting. "Because we've found it in one field probably

indicates it's in a hundred fields," says Chilvers, urging producers and crop advisers to keep an eye out for symptoms during routine scouting and to send samples from plants where the disease is suspected to a diagnostic clinic for confirmation.

Tar spot symptoms can be mistaken for common rust and southern rust, fungal diseases that occur every year to some extent in the U.S. Both *Puccinia sorghi* in common rust and *Puccinia polysora* in southern rust form pustules on the surfaces of corn leaves that resemble tar spots. Corn rusts generally produce spores with a reddish-brown color at early stages while mature fungi produce darker spores that resemble the ascomata of *P. maydis*, according to Chilvers. Pustules of both rusts sit above the leaf's epidermis and can be distinguished from ascomata of tar spot by scraping the spots with a fingernail. Rust diseases will scrape off relatively easily while tar spots can't be scraped off without tearing into the plant (Jackson-Ziems, 2014).

According to The International Maize and Wheat Improvement Center (CIMMYT), recommended IPM practices include the following (Mahuku et al., 2013):

- Plant resistant varieties. The Mexican National Institute of Forestry, Agriculture, and Livestock Research (INIFAP) has developed several resistant hybrids (H-377, H-318, H-562, and H-563).
- Plant the entire crop early or on time. Avoid staggered planting, as earlier plantings may be a source of inoculum for later plantings. Late-planted crops usually show high disease incidence.
- Reduce inoculum sources by eliminating crop residues and stubble.
- Avoid using fields with known incidences of tar spot complex or that are close to river banks.
- Rotate corn with crops on which the pathogen will not grow; these include common bean and horticulture crops.
- Monitor fields where the disease has previously appeared regularly, starting about 40 days after emergence or when the crop has eight leaves.
- Follow recommended planting densities; greater than 30,000 plants/ac may favor disease development.
- Use recommended dosages of nitrogen fertilizer.
- Fungicides used in the U.S. haven't been tested against tar spot, according to Chilvers.

## Bacterial leaf streak of corn

Bacterial leaf streak disease of corn was officially reported in the U.S. in 2016 in Nebraska and has since been confirmed in Colorado, Illinois, Iowa, Kansas, Minnesota, Oklahoma, South Dakota, and Texas; however, researchers speculate the disease may have been present in the U.S. as early as 2014 (Jackson-Ziems et al., 2016). While bacterial leaf streak is not expected to have a substantial economic effect on corn yield, the disease has spread rapidly, reaching epidemic levels in parts of Colorado, Kansas, and Nebraska (Lang et al., 2017). According to Dr. Tamra Jackson-Ziems, extension plant pathologist at the University of Nebraska–Lincoln, the disease was less severe in 2017 than it was in 2016.

The disease is caused by the bacterium *Xanthomonas vasicola* pv. *vasculorum* (Xvv) and has previously only been reported on corn in South Africa and Argentina. The bacterium is also known to cause a gumming disease in sugarcane common to most sugarcane-producing regions. Gumming disease moves systemically inside sugarcane plants, causing the most damage when bacteria infect the main shoot. According to Jackson-Ziems, this has never been shown to occur in corn. *Xanthomonas* has also been reported to infect sorghum and some tropical grasses, but this research was completed in greenhouses rather than in field trials, not with species common to the Midwest or to the U.S. in general. Collaborating researcher, Dr. Kirk Broders, plant pathologist at Colorado State University, indicates the bacteria that causes leaf streak in sorghum is *Xanthomonas vasicola* pv. *holcicola* and isn't known to infect corn. This suggests bacterial leaf streak of corn was not spread from sorghum and rather was transported to the U.S. from Argentina or South Africa on corn.

By comparing genomes of about two dozen isolates of Xvv from South Africa, Argentina, and the U.S., Broders and his team found that one lineage from Argentina was very similar to isolates from North America. U.S. isolates were much more genetically homogenous than the those from Argentina, suggesting the disease has been present in Argentina for some time and spread relatively recently to the U.S. More corn seed arrives in the US from Argentina than from South Africa, further supporting this origin.

Symptoms can look very similar to those of other foliar diseases of corn. Characteristics include long, narrow, stripe-like lesions, which develop between veins starting in the lower leaves. The lesions are usually one to several inches long and occur close to the midrib or across the leaf blade. Streaks will range in color from tan to brown or even orange. A distinguishing feature of bacterial leaf streak is a yellow halo extending from each lesion when infected leaves are backlit (Robertson and Mueller, 2016).

Gray leaf spot is a common "look-alike" disease. "Since gray leaf spot is caused by a fungal disease, many of our producers and crop consultants know that the dis-

**Far right:** Bacterial leaf streak in an Iowa corn field. **Inset:** Lesions of bacterial leaf streak are often surrounded by a yellow coloration when backlit. Source: Dr. Tamra Jackson-Ziems.

ease can be managed with foliar fungicides," Jackson-Ziems says. When they see bacterial leaf streak develop, often early in the season, it leads them to believe they may be seeing gray leaf spot developing early. "Some of our producers have made fungicide applications trying to control it, but fungicides don't control bacterial diseases like bacterial leaf streak."

Distinguishing bacterial leaf streak from gray leaf spot is challenging. Noting the time of year that lesions first appear may help differentiate the two. Spores of gray leaf spot become active at cooler temperatures than Xvv in bacterial leaf streak, which prefers warm, humid conditions. "Lesions that develop earlier in the season in the Midwest are more likely to be bacterial leaf streak, but this is not true across the board," Jackson-Ziems says. "When comparing the two diseases, bacterial leaf streak lesions will be more translucent and will generally have more of a yellow halo surrounding the curvy edges of the lesion. The fungus that causes gray leaf spot tends to stay more confined to the straight edges of the leaf's veins, and therefore, tends to appear more rectangular in shape," she says.

The bacteria are most likely spread via wind-driven rain based on observations of lower leaves experiencing infections sooner than upper leaves. After an infection, the disease can be spread via contamination through splashed moisture or leaf-to-leaf contact. *Xanthomonas vasicola* pv. *vasculorum* does not require epidermal wounds to enter a host plant and is believed to enter through natural openings such as stomata. Bacteria can survive during harsh environmental conditions in infested residue, putting future crops at risk of infection from overwintered spores (Hartman and Jackson-Ziems, 2017).

Preliminary research has shown some levels of resistance to the bacterial leaf streak pathogen in some corn hybrids, and more definitive data will be available after at least one more season of research according to Broders. After a one-year rotation to soybeans or wheat, inoculum levels are expected to decrease significantly. To slow the spread of disease, equipment can be disinfected when moving from an infected field to a disease-free field (Hartman and Jackson-Ziems, 2017). Tillage reduces disease severity by promoting degradation of infected crop debris. Research by Broders has shown infected residue buried four to six inches beneath the soil surface can reduce Xvv populations a hundredfold vs. leaves left on the soil surface. However, only a small amount of initial inoculum is required to infect an entire field.

## Conclusion

Additional research is required to fully understand the potential for these diseases to impact yields. Ultimately, "the magnitude of yield impact for most foliar diseases is up to how much leaf area is destroyed," Jackson-Ziems says. "When leaf area is impacted or compromised, it inhibits the plant's ability to fill grain." Future research on these pathogens will include development of detailed epidemiological models and resistant hybrids. In the meantime, informed routine scouting, pathogen confirmation via diagnostic clinics, and alerting researchers of new infections is recommended. &

*See References on p. 59. See quiz for CEU credit on p. 40.*

McKenzie, R.H., A.B. Middleton, E.D. Solberg, J. DeMulder, N. Flore, G.W. Clayton, and E. Bremer. 2001a. Response of pea to rhizobia inoculation and starter nitrogen in Alberta. Can. J. Plant Sci. 81:637–643.

McKenzie, R.H., A.B. Middleton, E.D. Solberg, J. DeMulder, N. Flore, G.W. Clayton, and E. Bremer. 2001b. Response of pea to rate and placement of triple superphosphate fertilizer in Alberta. Can. J. Plant Sci. 81:645–649.

Mohammed, Y.A., and C. Chen. 2018. Micronutrient fertilizer application to increase pea yield and improve nutritional quality. Fertilizer eFacts No. 77. Montana State University Extension, Bozeman, MT. http://landresources.montana.edu/fertilizerfacts/index.html

Rice, W.A., G.W. Clayton, P.E. Olsen, and N.Z. Lupwayi. 2000. Rhizobial inoculant formulations and soil pH influence field pea nodulation and nitrogen fixation. Can. J. Soil Sci. 80:395–400.

# Corn foliar diseases [continued from p. 35]

## References

Broders, K. 2017. Status of bacterial leaf streak of corn in the United States. Colorado State University, Bioagricultural Sciences and Pest Management. Iowa State University: Integrated Crop Management Conference. https://lib.dr.iastate.edu/cgi/viewcontent.cgi?article=1267andcontext=icm

CABI Plantwise. 2018. Sugarcane gumming disease (*Xanthomonas axonopodis* pv. *vasculorum*). Plantwise Knowledge Bank. www.plantwise.org/KnowledgeBank/Datasheet.aspx?dsid=56980#

Cao, S., A. Loladze, Y. Yuan, Y. Wu, A. Zhang, J. Chen et al. 2017. Genome-wide analysis of tar spot complex resistance in maize using genotyping-by-sequencing SNPs and whole-genome prediction. The Plant Genome 10. doi:10.3835/plantgenome2016.10.0099

CGIAR. 2016. Tar spot complex in Latin America. http://maize.org/tar-spot-in-latin-america/

Chalkley, D. 2010. Tar spot of corn—*Phyllachora maydis*. Systematic Mycology and Microbiology Laboratory, USDA-ARS. https://nt.ars-grin.gov/taxadescriptions/factsheets/index.cfm?thisapp=Phyllachoramaydis

Cline, E. 2005. *Phyllachora maydis*. U.S. National Fungus Collections, USDA-ARS. https://nt.ars-grin.gov/sbmlweb/onlineresources/nomenfactsheets/rptBuildFactSheet_onLine.cfm?thisName=Phyllachora%20maydis&currentDS=specimens

Crop Protection Network. 2008. Bacterial leaf streak—corn disease management. Crop Protection Network. https://cropprotectionnetwork.org/encyclopedia/corn-disease-management/foliar-diseases/bacterial-leaf-streak/

Hartman, T., and T. Jackson-Ziems. 2017. Update on bacterial leaf streak of corn in Nebraska. https://cropwatch.unl.edu/2017/update-bacterial-leaf-streak-corn-nebraska

Hock, J., B. Dittrich, B.L. Renfro, and J. Kranz. 1992. Sequential development of pathogens in the maize tarspot disease complex. Mycopathologia 117(3):157–161. https://doi.org/10.1007/BF00442777

Hock, J., J. Kranz, and B.L. Renfro. 1995. Plant Pathol. 44(3). https://doi.org/10.1111/j.1365-3059.1995.tb01671.x

Jackson-Ziems, T.A. 2014. Rust diseases of corn in Nebraska. University of Nebraska–Lincoln, Institute of Agriculture and Natural Resources. NebGuide. http://extensionpublications.unl.edu/assets/pdf/g1680.pdf

Jackson-Ziems, T., K. Korus, T. Adesemoye, and J. Van Meter. 2016. Bacterial leaf streak of corn confirmed in Nebraska, other Corn Belt states. University of Nebraska–Lincoln, Institute of Agriculture and Natural Resources. Cropwatch, 26 Aug. 2016. https://crop watch.unl.edu/2016/bacterial-leaf-streak-corn-confirmed-nebraska

Lang, J.M., E. DuCharme, J. Ibarra Caballero, E. Luna, T. Hartman, M. Ortiz-Castro, K. Korus, T.A. Jackson-Ziems, K. Broders, and J.E. Leach. 2017. Detection and characterization of *Xanthomonas vasicola* pv. *vasculorum* (Cobb 1894) comb. nov. causing bacterial leaf streak of corn in the United States. Phytopathology 107(11):1312–1321. doi:10.1094/PHYTO-05-17-0168-R

Mahuku, G., R. Shrestha, and F.M. San Vicente. 2013. Tar spot complex of maize: Facts and actions. https://www.researchgate.net/publication/266732736_Tar_Spot_Complex_of_Maize_Facts_and_Actions

Mottaleb, K.A., A. Loladze, K. Sonder, G. Kruseman, and F. San Vicente. 2018. Threats of tar spot complex disease of maize in the United States of America and its global consequences. Mitigation and Adaptation Strategies for Global Change. https://doi.org/10.1007/s11027-018-9812-1

Robertson, A. 2008. Is that common or southern rust showing up in Iowa fields? Integrated Crop Management, 22 July 2008. Iowa State University Extension and Outreach. https://crops.extension.iastate.edu/cropnews/2008/07/common-or-southern-rust-showing-iowa-fields

Robertson, A., and D. Mueller. 2016. Bacterial leaf streak of corn. Iowa State University Extension and Outreach. Retrieved from https://store.extension.iastate.edu/product/Bacterial-Leaf-Streak-of-Corn

Robertson, A., and E. Zaworski. 2016. Tar spot confirmed in corn in eastern Iowa. Integrated Crop Management, 28 Sept. 2016. Iowa State University Extension and Outreach. https://crops.extension.iastate.edu/cropnews/2016/09/tar-spot-confirmed-corn-eastern-iowa

Ruhl, G., M.K. Romberg, S. Bissonnette, D. Plewa, T. Creswell, and K.A. Wise. 2016. First report of tar spot on corn caused by *Phyllachora maydis* in the United States. Plant Disease 100(7):1496. https://doi.org/10.1094/PDIS-12-15-1506-PDN